TS-hx65

TS-h665
TS-h865

User Guide

Document version: 5
09/09/2026

Contents

1. Important Information

Safety information....3

2. Product Overview

About the TS-hx65....6
Hardware specifications....6
Package contents....9
Components....10
- Front panel....10
- Rear panel....13
- System board....15

Installation requirements....15
Setting up the NAS....16

3. Hardware installation

Drive installation....17
- Installing 3.5-inch hard drives....17
- Installing 2.5-inch solid-state drives....21
- Installing M.2 solid-state drives....25
- Installing 5.9 mm E1.S solid-state drives....31
- Installing 9.5 mm and 15 mm E1.S solid-state drives....35

Replacing memory modules....39
Installing expansion cards....46
Connecting USB expansion units....53

4. QuTS hero installation

Initializing QuTS hero using Qfinder Pro....55
Initializing QuTS hero using the cloud installation website....57

5. Basic Operations

Power button....61
Reset button....61
USB One Touch Copy button....62
LEDs....62
Audio alerts....65

6. NAS Migration

NAS migration requirements....67
Status and setting changes after NAS migration....67
Migrating a NAS....69

7. Troubleshooting

Forcing Qfinder Pro or myQNAPcloud to locate the NAS....70
Hot-swapping failed drives....70

Recovering unintentionally removed healthy drives..... 71
Support and other resources..... 71

8. Glossary

Cloud Key..... 73
myQNAPcloud..... 73
myQNAPcloud Link..... 73
Qfinder Pro..... 73
QNAP Account..... 73
QuTS hero..... 73

9. Notices

Limited warranty..... 74
Disclaimer..... 74
Copyright and trademarks..... 74
GNU General Public License..... 75
CE notice..... 84
UKCA notice..... 84
FCC notice..... 84
VCCI notice..... 85
BSMI notice..... 85
SJ/T 11364-2006..... 86

1. Important Information

Original Packaging

Please keep the original packaging and packaging materials. If you want to return the product or send it for repairs, please use the original packaging to avoid damage.

QNAP reserves the right not to provide a refund or warranty service for products that are damaged due to improper packaging.

Hardware Defects

If your QNAP product has hardware defects, return the product to QNAP or a QNAP-authorized service center for maintenance or replacement. Any attempt to repair or perform maintenance procedures on the product by you or an unauthorized third party invalidates the warranty.

QNAP is not responsible for any damage or data loss caused by unauthorized modifications and installation of unsupported third-party applications.

For details, see the QNAP Warranty Terms and Conditions.

Safety information

The following instructions help ensure personal safety and environmental safety. Read these instructions carefully before performing any operation.

General Instructions

⚠ WARNING

- To avoid potential injury or damage to components, ensure that the drives and other internal system components have cooled before touching them.
- Always ensure that all drive trays, including empty ones, are properly installed in the device. Missing trays can alter the intended airflow, potentially causing internal components to overheat.

Observe electrostatic discharge (ESD) procedures to avoid potential injury or damage to components.

Power

⚠ WARNING

To reduce the risk of fire or electric shock, ensure that you only connect the power cord to a properly grounded electrical outlet.

To avoid serious injuries, a trained service technician must disconnect all PSU cords from the device before installing or replacing system components.

Moving Parts

⚠ WARNING

Moving fan blades: Keep your body parts away from any moving fan blades while the device is connected to a power source.

Moving components: Keep your body parts away from any other moving components.

The device is not suitable for use in locations where children are likely to be present.

System Battery

⚠ WARNING

INGESTION HAZARD

- This product may contain a button battery.
- Keep batteries out of reach of children.
- If swallowed, a lithium button battery can cause severe or fatal injuries within 2 hours.
- If you think batteries may have been swallowed or placed inside any part of the body, seek immediate medical attention.

- To avoid potential battery explosion, causing injury or damage to components, ensure that you replace the existing battery with a battery of the same type.
- Dispose of used batteries properly according to local regulations or the instructions of the battery manufacturer.

- Even used batteries may cause severe injury or death.
- Call a local poison control center for treatment information.
- For information on the type and voltage of the button battery in your device, please see the hardware specification table.
- Non-rechargeable batteries are not to be recharged.
- Do not force discharge, recharge, disassemble, heat, or incinerate. Doing so may result in injury due to venting, leakage, or explosion resulting in chemical burns.
- Ensure the batteries are installed correctly according to polarity (+ and -).
- Do not mix old and new batteries, or different brands or types of batteries, such as alkaline, carbon-zinc, or rechargeable batteries.
- Remove and immediately recycle or dispose of batteries from equipment not used for an extended period of time according to local regulations.
- Always completely secure the battery compartment. If the battery compartment does not close securely, stop using the product, remove the batteries, and keep them away from children.

2. Product Overview

This chapter provides basic information about your QNAP device.

About the TS-hx65

The QNAP TS-hx65 is a compact, high-performance NAS designed for users who require reliable storage, data protection, and flexible expansion in a desktop form factor. Powered by an Intel® quad-core processor and running the QuTS hero operating system with the ZFS file system, the TS-hx65 delivers enhanced data integrity, snapshot protection, and efficient storage management for home offices and small to medium-sized business environments.

Available in multiple drive bay configurations, the TS-hx65 supports 3.5-inch SATA drives as well as E1.S and M.2 NVMe SSDs for caching or tiered storage. With built-in 2.5 GbE connectivity, PCIe expandability, and support for SSD cache acceleration, the TS-hx65 provides scalable performance, reliable data protection, and versatile deployment options for modern storage workloads.

Hardware specifications

Warning

- If your QNAP product has hardware defects, return the product to QNAP or a QNAP-authorized service center for maintenance or replacement. Any attempt to repair or perform maintenance procedures on the product by you or an unauthorized third party invalidates the warranty.
- QNAP is not responsible for any damage or data loss caused by unauthorized modifications and installation of unsupported third-party applications.
- For details, see the QNAP Warranty Terms and Conditions.

Tip

Model specifications are subject to change without prior notice. To see the latest specifications, go to https://www.qnap.com.

Component	TS-h665-8G	TS-h865-8G
Processor		
CPU	Intel® N150 Quad-core processor	
Frequency	4-core/4-thread, 3.6 GHz burst	
Architecture	x86 64-bit	

Component	TS-h665-8G	TS-h865-8G
Encryption engine	AES-NI	
Memory		
Pre-installed memory	8 GB DDR5 SODIMM	
Memory slots	1 x DDR5 SODIMM In-band ECC supported **Note** Use only QNAP memory modules to maintain system performance and stability. For NAS devices with more than one memory slot, use QNAP modules with identical specifications. Using unsupported modules may degrade performance, cause errors, or prevent the operating system from starting.	
Maximum memory	16 GB RAM: 1 x 16 GB	
Storage		
Drive bays	• 4 x 3.5-inch SATA 6 GBps bays • 2 x E1.S/M.2 NVMe Gen3 x1 bays	• 6 x 3.5-inch SATA 6 GBps bays • 2 x E1.S/M.2 NVMe Gen3 x1 bays
Drive compatibility	3.5-inch bays: • 3.5-inch SATA hard disk drives E1.S NVMe PCIe SSD • M.2 2280 PCIe NVMe solid-state drives • E1.S NVMe solid-state drives (up to 15 mm height) **Tip** For the list of compatible drive models, go to https://www.qnap.com/compatibility.	
Hot-swapping	This device supports hot-swapping for all drives.	

Component	TS-h665-8G	TS-h865-8G
SSD cache acceleration support	This device supports SSD cache acceleration for all drives.	
Network		
2.5 Gigabit network interface	2 x 2.5 GbE RJ45 **Note** The 2.5 Gigabit Ethernet port supports the following network connectivity speeds: 2.5 Gbps, 1 Gbps, 100 Mbps, 10 Mbps	
Wake-on-LAN	Yes	
External I/O Ports & Expansion Slots		
HDMI ports	1 x HDMI (up to 4096 x 2160 @ 60Hz)	
USB ports	• 2 x USB 2.0 Type-A • 2 x USB 3.2 Gen 2 Type-A • 1 x USB 3.2 Gen 2 Type-C	
PCIe slots	1 x PCIe 3.0 x2 **Tip** For the list of compatible drive models and expansion cards, go to https://www.qnap.com/compatibility.	
Interface		
Buttons	• Power • Reset • USB One Touch Copy	
Dimensions		
Form factor	Tower	Tower
Dimensions (H x W x D)	171 x 195 x 232 mm (6.73 x 7.67 x 9.13 in)	171 x 266 x 232 mm (6.73 x 10.47 x 9.13 in)

Component	TS-h665-8G	TS-h865-8G
Net weight	2.6 kg (5.73 lbs)	3.2 kg (7.05 lbs)
Others		
Power supply unit	90W, 100-240V	120W, 100-240V
System battery	CR2032 lithium battery (3V, 225 mAh) **Warning** • This battery is a button battery. If swallowed, a lithium button battery can cause severe or fatal injuries within 2 hours. Keep batteries out of reach of children. • To avoid potential battery explosion, causing injury or damage to components, ensure that you replace the existing battery with a battery of the same type. **Important** Dispose of used batteries according to local regulations or the instructions of the battery manufacturer.	
Fans	1 x 120mm, 12 VDC	2 x 90mm, 12 VDC
Operating temperature	0˚C to 40˚C (32˚F to 104˚F)	
Relative humidity	• Non-condensing relative humidity: 5% to 95% • Wet-bulb temperature: 27˚C (80.6˚F)	

Package contents

Item	Quantity
TS-hx65	1
Power cord	1
AC power adapter	1

Item	Quantity
Ethernet cable	1 x Cat5e **Note** The Cat5e Ethernet cable supports transfer speeds of up to 2.5 Gbps.
Screws for 3.5-inch drives	• TS-h665-8G: 16 • TS-h865-8G: 24
Screws for 2.5-inch drives	• TS-h665-8G: 12 • TS-h865-8G: 18
Quick Installation Guide (QIG)	1

Components

Front panel

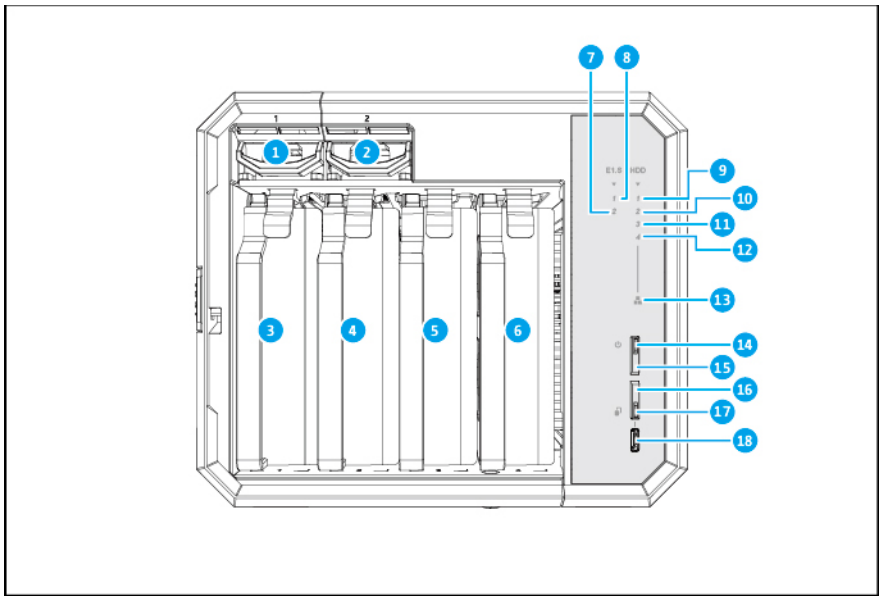

Note
This image shows the device with the front cover removed.

TS-h665-8G front panel

No.	Component	No.	Component
1	E1.S drive bay 1	10	3.5-inch drive 2 LED
2	E1.S drive bay 2	11	3.5-inch drive 3 LED
3	3.5-inch drive bay 1	12	3.5-inch drive 4 LED
4	3.5-inch drive bay 2	13	LAN LED
5	3.5-inch drive bay 3	14	Status LED
6	3.5-inch drive bay 4	15	Power button
7	E1.S drive 2 LED	16	USB One Touch Copy button
8	E1.S drive 1 LED	17	USB LED
9	3.5-inch drive 1 LED	18	USB port 1: USB 3.2 Gen 2 Type-C **Note** This USB port supports One Touch Copy.

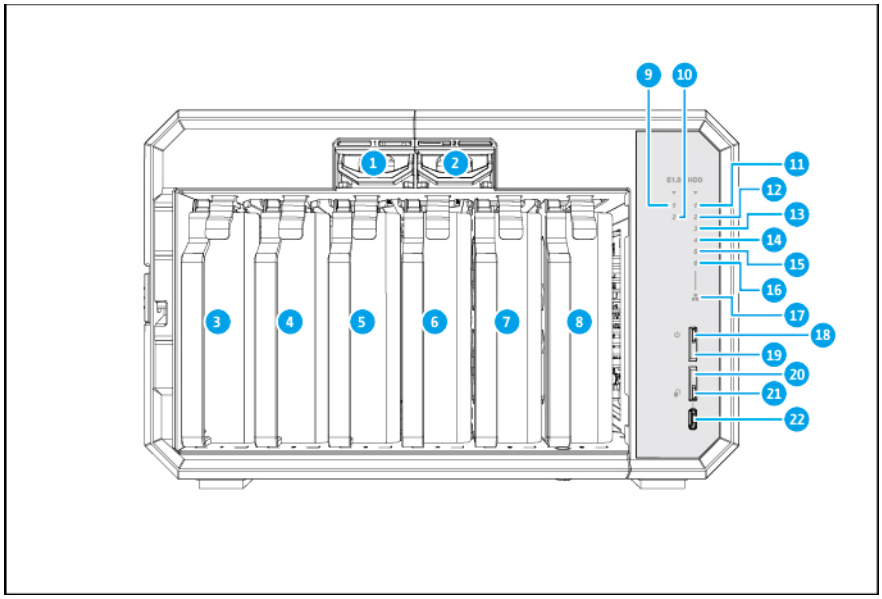

Note

This image shows the device with the front cover removed.

TS-h865-8G front panel

No.	Component	No.	Component
1	E1.S drive bay 1	12	3.5-inch drive 2 LED
2	E1.S drive bay 2	13	3.5-inch drive 3 LED
3	3.5-inch drive bay 1	14	3.5-inch drive 4 LED
4	3.5-inch drive bay 2	15	3.5-inch drive 5 LED
5	3.5-inch drive bay 3	16	3.5-inch drive 6 LED
6	3.5-inch drive bay 4	17	LAN LED
7	3.5-inch drive bay 5	18	Status LED
8	3.5-inch drive bay 6	19	Power button
9	E1.S drive 1 LED	20	USB One Touch Copy button
10	E1.S drive 2 LED	21	USB LED
11	3.5-inch drive 1 LED	22	USB port 1: USB 3.2 Gen 2 Type-C **Note** This USB port supports One Touch Copy.

Rear panel

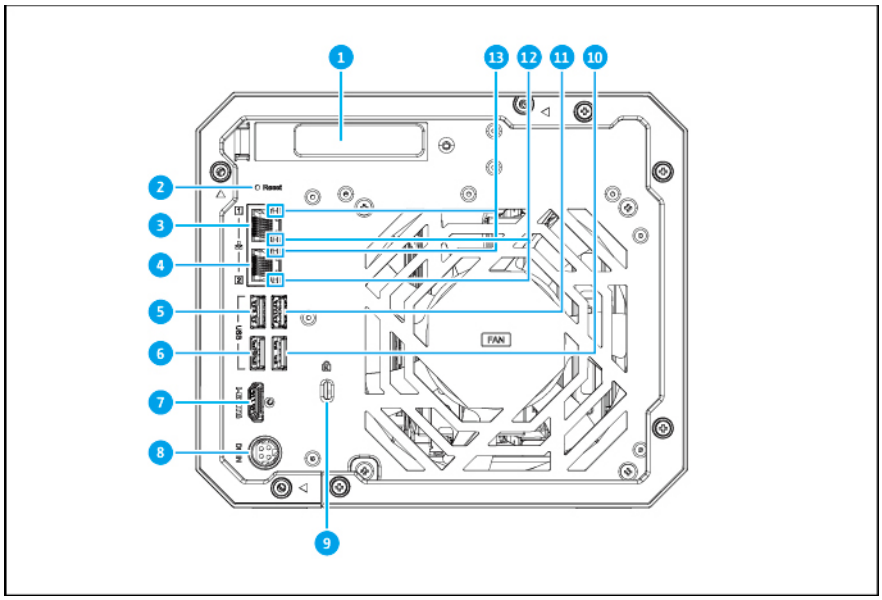

TS-h665-8G rear panel

No.	Component	No.	Component
1	PCIe slot 1: PCIe Gen 3 x2	8	Power input
2	Reset button	9	Kensington security slot
3	Network port 1: 2.5 GbE (RJ45)	10	USB port 2: USB 2.0
4	Network port 2: 2.5 GbE (RJ45)	11	USB port 1: USB 3.2 Gen 2
5	USB port 3: USB 3.2 Gen 2	12	2.5 Gigabit Ethernet activity LED
6	USB port 4: USB 2.0	13	2.5 Gigabit Ethernet speed LED
7	HDMI port	-	-

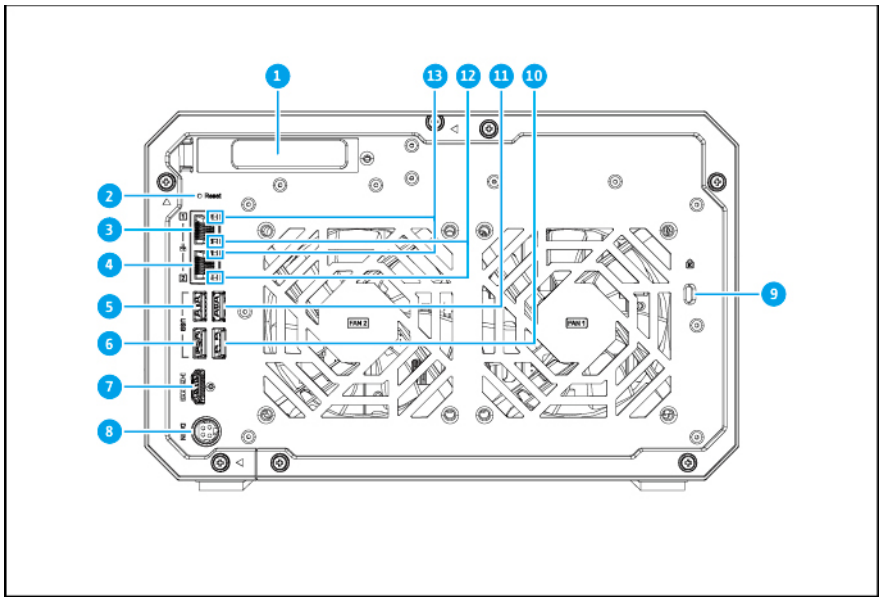

TS-h865-8G rear panel

No.	Component	No.	Component
1	PCIe slot 1: PCIe Gen 3 x2	8	Power input
2	Reset button	9	Kensington security slot
3	Network port 1: 2.5 GbE (RJ45)	10	USB port 2: USB 2.0
4	Network port 2: 2.5 GbE (RJ45)	11	USB port 1: USB 3.2 Gen 2
5	USB port 3: USB 3.2 Gen 2	12	2.5 Gigabit Ethernet activity LED
6	USB port 4: USB 2.0	13	2.5 Gigabit Ethernet speed LED
7	HDMI port	-	-

System board

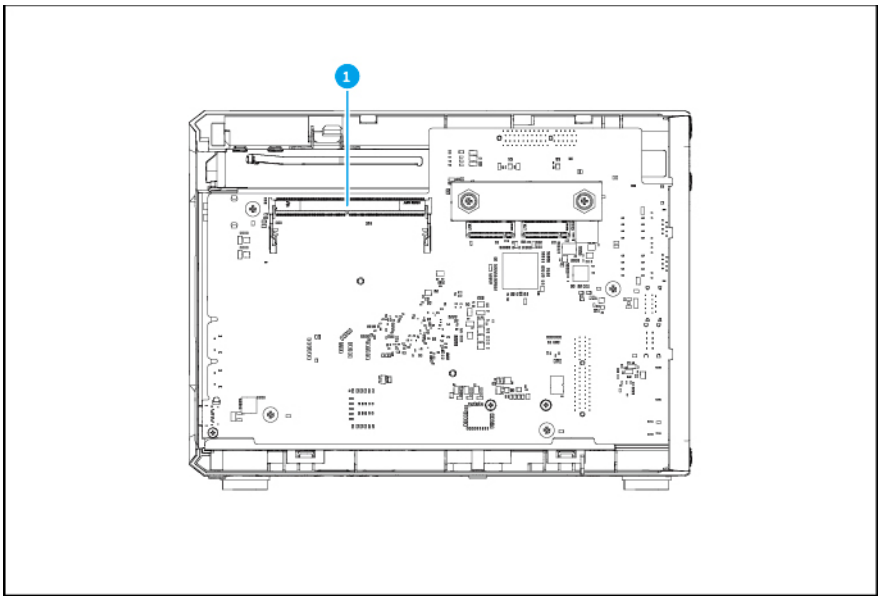

No.	Component	No.	Component
1	Memory slot	-	-

Installation requirements

Category	Item
Environment	• Room temperature: 0˚C to 40˚C (32˚F to 104˚F) • Non-condensing relative humidity: 5% to 95% • Wet-bulb temperature: 27˚C (80.6˚F) • Flat, anti-static surface without exposure to direct sunlight, liquids, or chemicals • Free from objects that may obstruct device ventilation or apply pressure to the device or power cord
Hardware and peripherals	• Storage drives **Tip** For the list of compatible drive models and expansion cards, go to https://www.qnap.com/compatibility. • Network cable

Category	Item
Tools	• Phillips #1 or #2 screwdriver • Anti-static wrist strap

Setting up the NAS

Important

Read all safety requirements and information carefully before setting up the NAS or installing NAS components.

1. Place your NAS device in an environment that meets the requirements.
   For details, see Installation requirements.
2. Install drives.
   For details, see Drive installation.
3. Optional: Install expansion cards.
   For details, see Installing expansion cards
4. Optional: Replace memory modules.
   For details, see Replacing memory modules
5. Optional: Connect expansion units.
   For details, see Connecting USB expansion units
6. Connect the power cord and all applicable cables.
7. Power on the NAS.
8. Install QuTS hero.
   For details, see QuTS hero installation
9. Log on to QuTS hero.

3. Hardware installation

This section provides information on installing drives and expansion cards, replacing memory modules, and connecting expansion units.

Drive installation

The TS-hx65 is compatible with 3.5-inch hard drives, 2.5-inch solid-state drives, M.2 solid-state drives, and E1.S solid-state drives.

Installing 3.5-inch hard drives

Warning

- Installing a drive deletes all data on the drive.
-
  Moving fan blades: Keep your hands and other body parts away from moving fan blades.
- Observe electrostatic discharge (ESD) procedures to avoid damage to components.

1. Power off the NAS.
2. Remove the front cover.
   a. Locate the locking mechanism on the left side of the device.
   b. Slide the lock up to release the front cover.

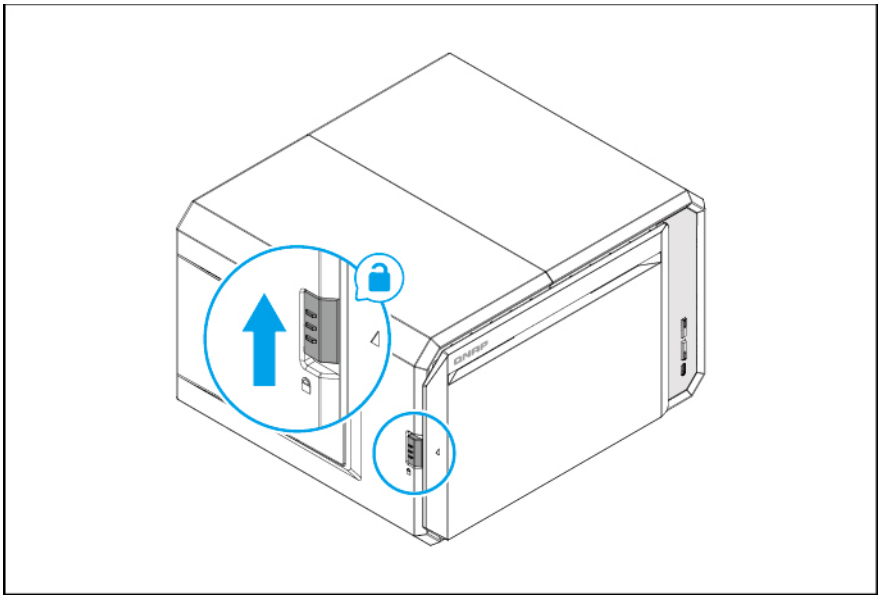

c. Pull the front cover away from the device.

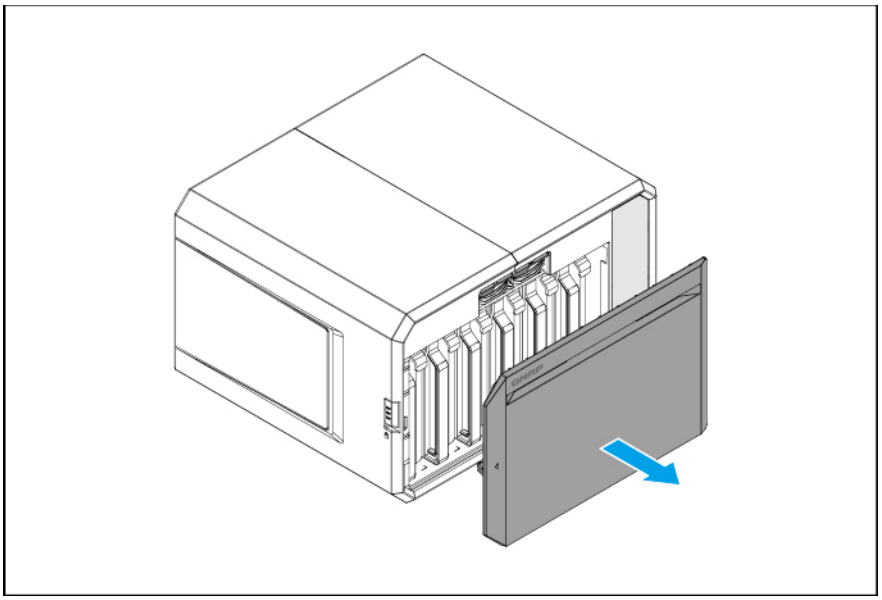

3. Remove the drive tray.

a. Remove a drive tray by simultaneously pressing the latch and pulling the tray.

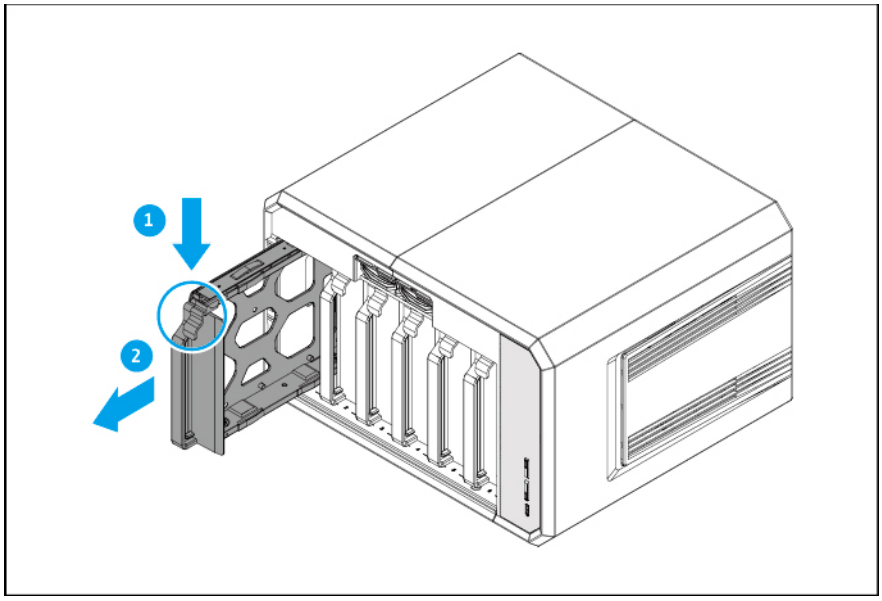

4. Install a drive on the tray.

   a. Remove the fastening panels from the sides of the drive tray.

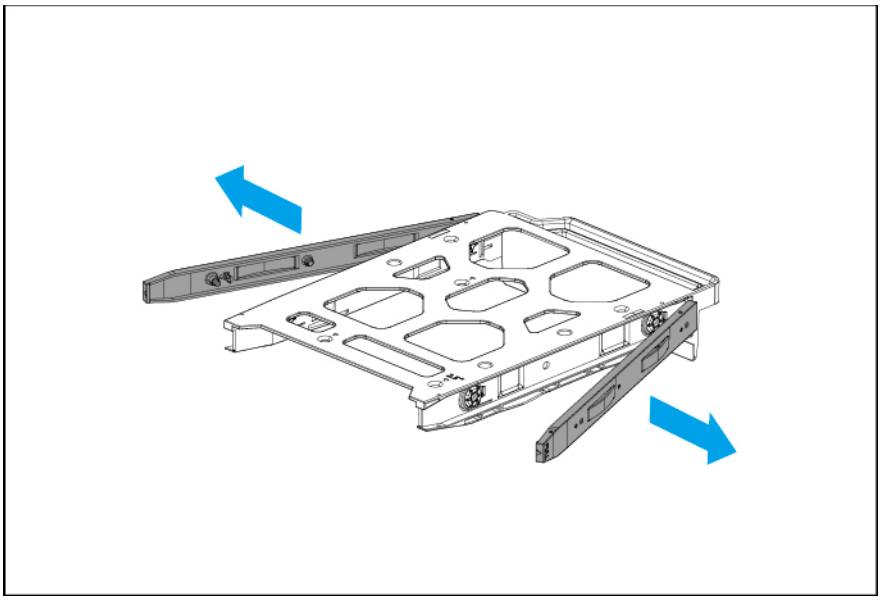

   b. Place the drive on the tray so that the holes on the bottom of the drive are aligned with the holes on the bottom of the tray.

   c. Attach the fastening panels to lock the drive to the tray.

   d. Optional: Attach the screws to further secure the drive.

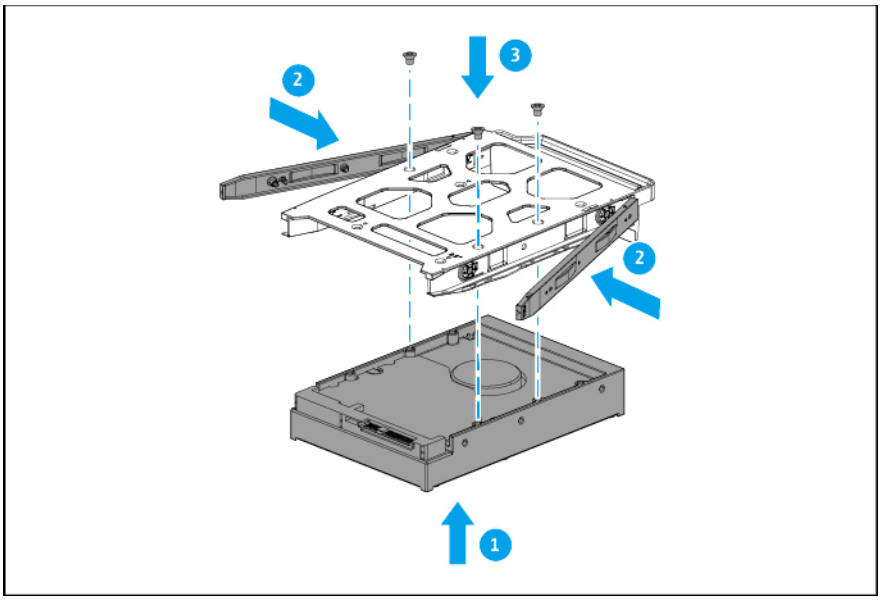

5. Insert the tray into the bay.

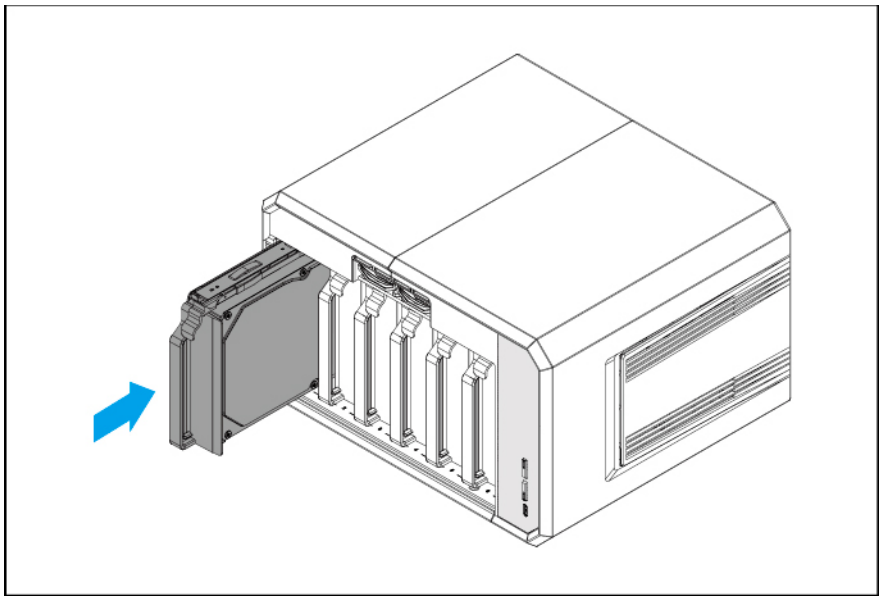

6. Attach the front cover.

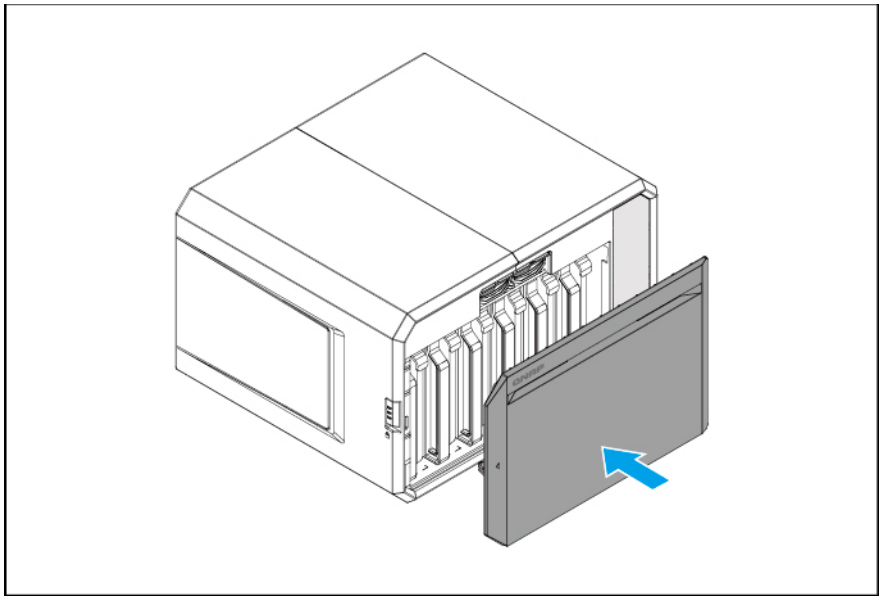

7. Slide the lock down to secure the front cover.

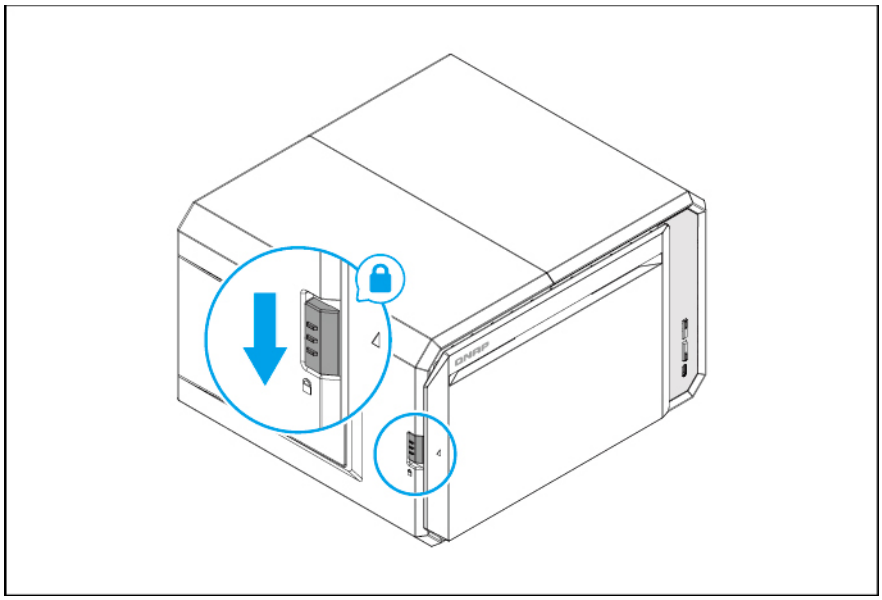

8. Power on the NAS.

Installing 2.5-inch solid-state drives

Warning

- Installing a drive deletes all data on the drive.
-
  Moving fan blades: Keep your hands and other body parts away from moving fan blades.
- Observe electrostatic discharge (ESD) procedures to avoid damage to components.

1. Power off the NAS.
2. Remove the front cover.
   a. Locate the locking mechanism on the left side of the device.

b. Slide the lock up to release the front cover.

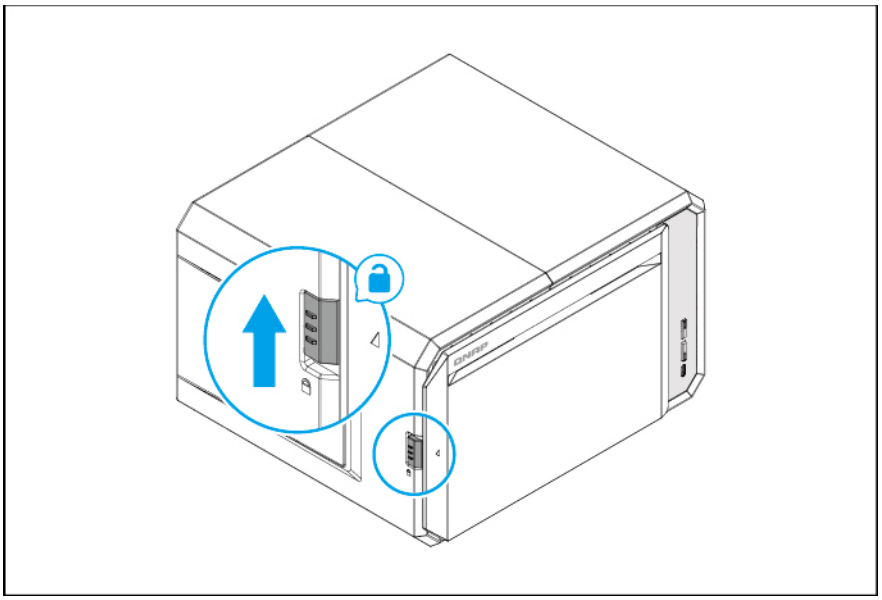

c. Pull the front cover away from the device.

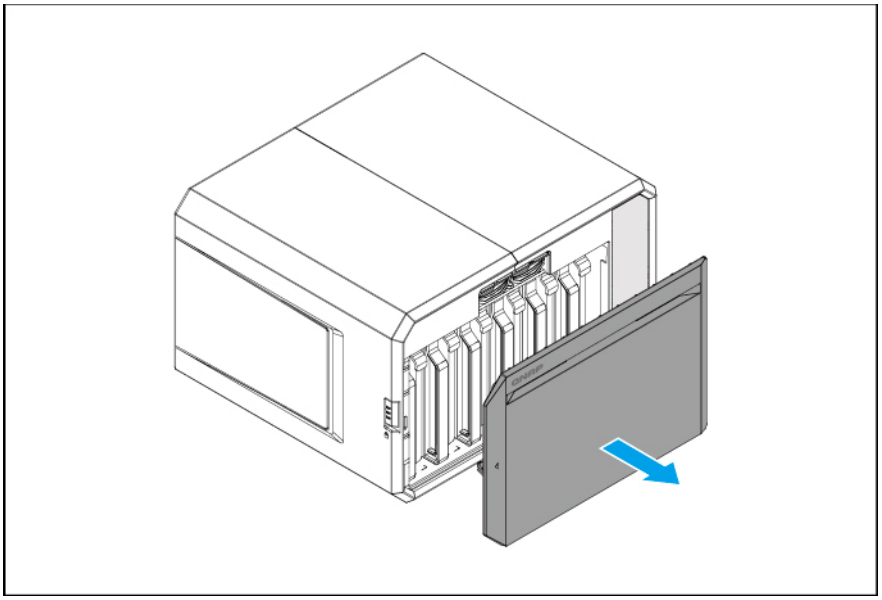

3. Remove the drive tray.

   a. Remove a drive tray by simultaneously pressing the latch and pulling the tray.

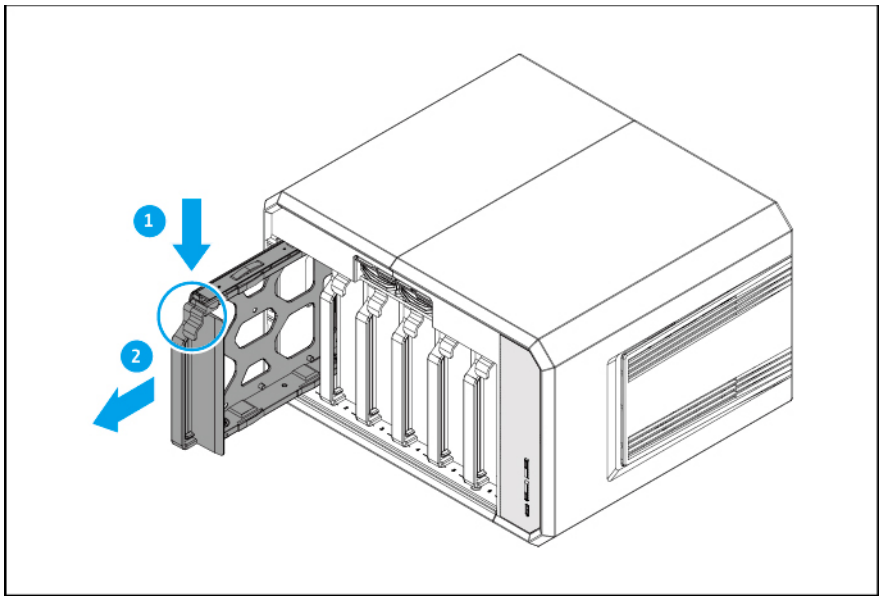

4. Install a drive on the tray.

   a. Remove the right fastening panel from the drive tray.

   b. Place the drive on the tray so that the holes on the bottom of the drive are aligned with the holes on the bottom of the tray.

   c. Attach the right fastening panel to lock the drive to the tray.

   d. Optional: Attach the screws to further secure the drive.

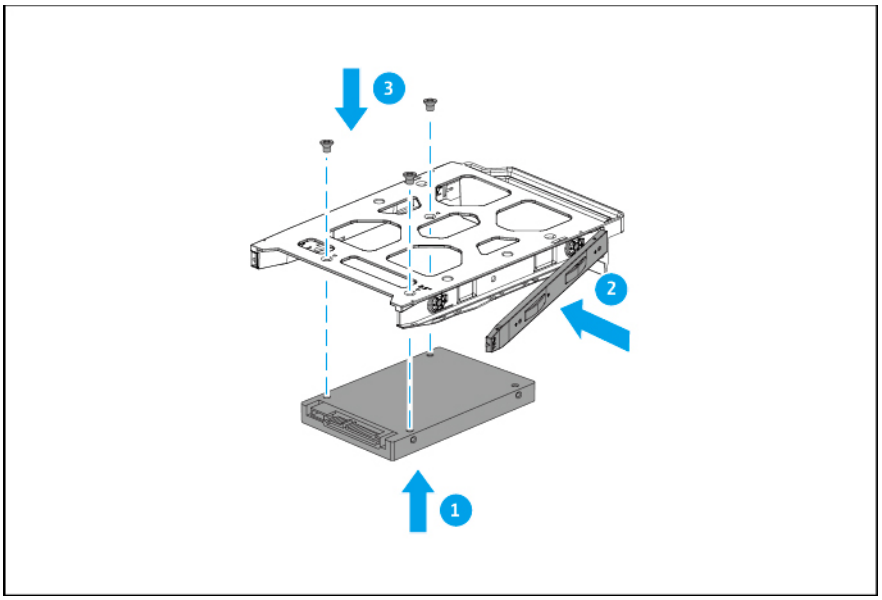

5. Insert the tray into the bay.

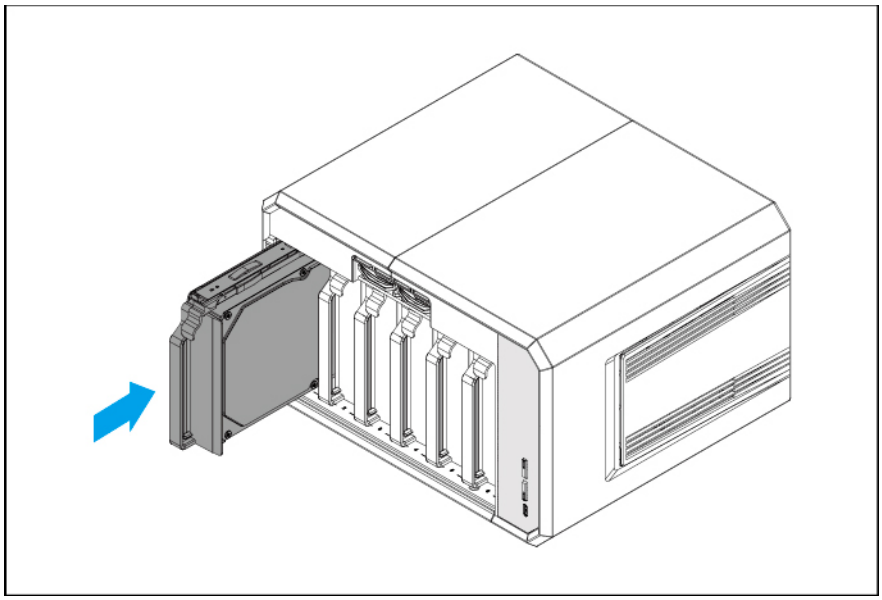

6. Attach the front cover.

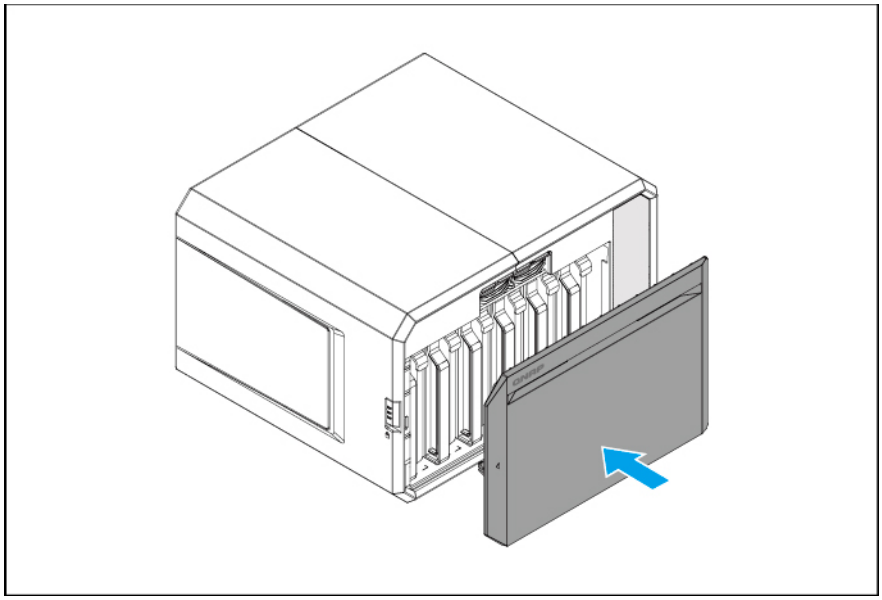

7. Slide the lock down to secure the front cover.

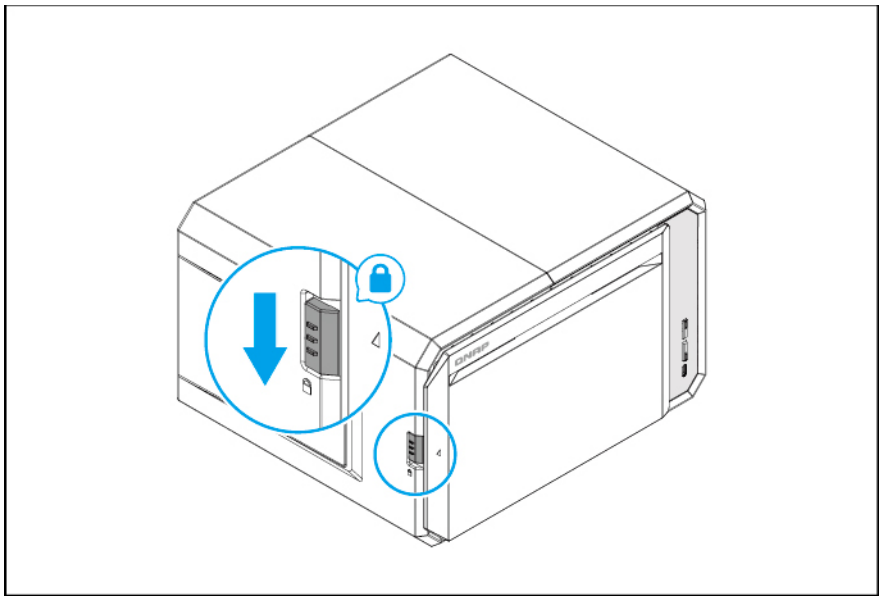

8. Power on the NAS.

Installing M.2 solid-state drives

- The TS-hx65 has two M.2 SSD trays in the Front panel.
- For a list of compatible M.2 SSDs, go to https://www.qnap.com/compatibility.

Warning

- Installing a drive deletes all data on the drive.
-
  Moving fan blades: Keep your hands and other body parts away from moving fan blades.
- Observe electrostatic discharge (ESD) procedures to avoid damage to components.

1. Remove the front cover.
   a. Locate the locking mechanism on the left side of the device.

b. Slide the lock up to release the front cover.

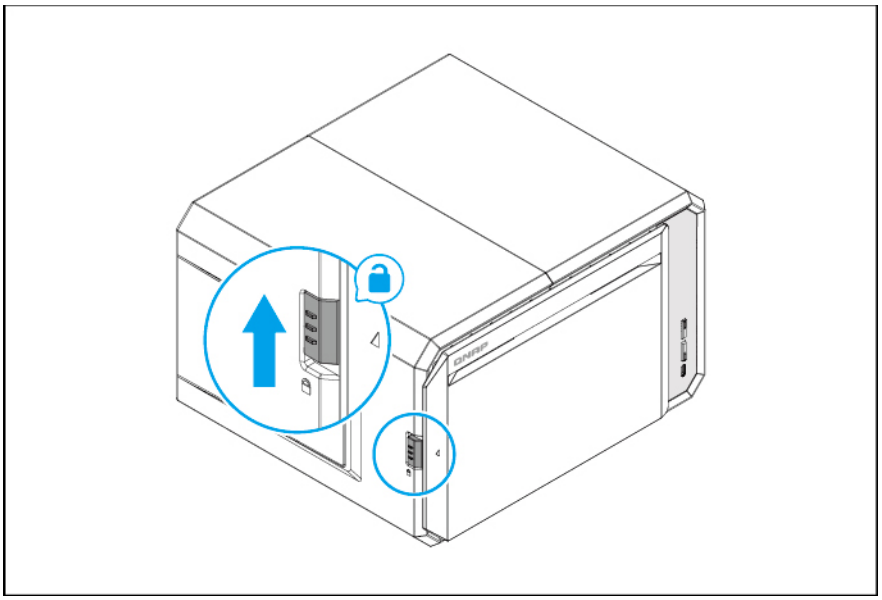

c. Pull the front cover away from the device.

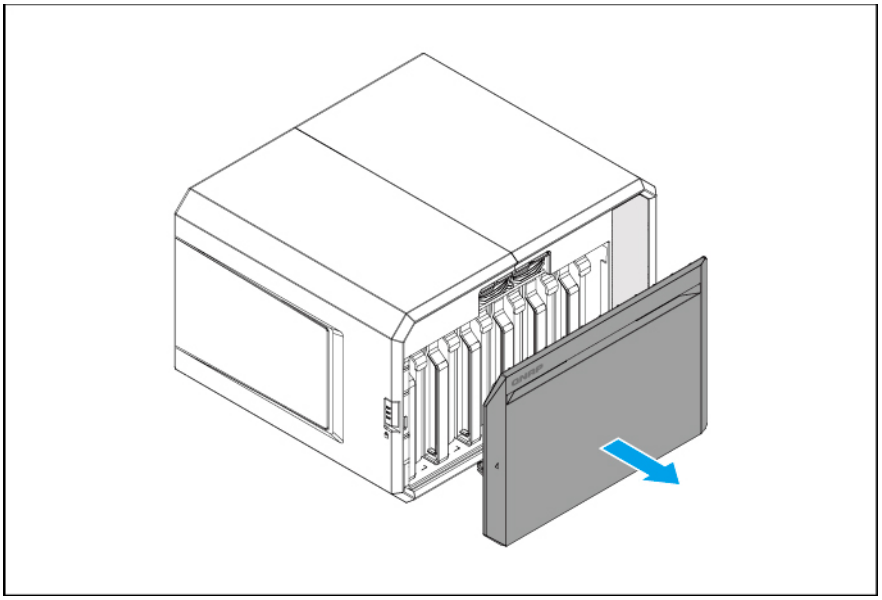

2. Remove the drive tray.

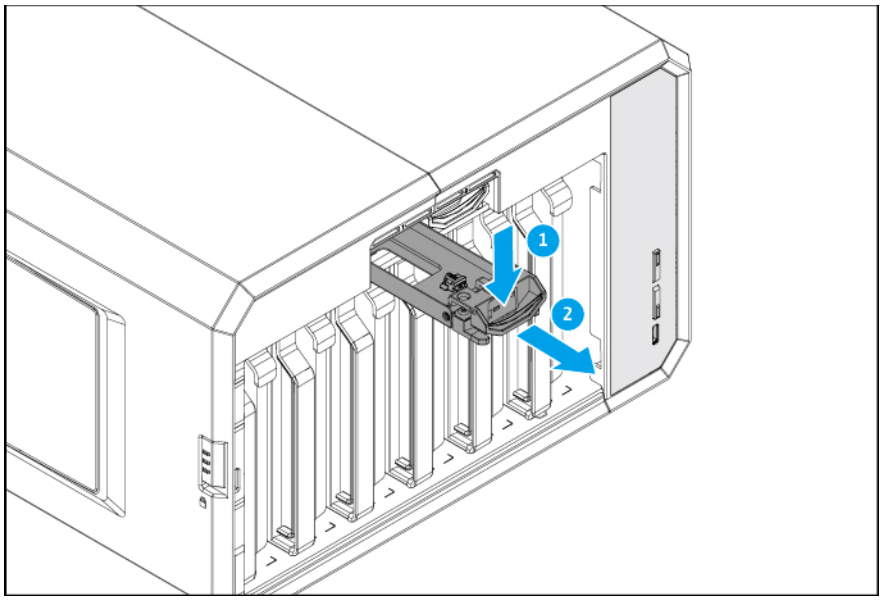

3. Optional: Install one or more thermal pads on the drive tray.

Note

- Thermal pads are not included with the NAS and must be purchased separately. For details, contact an authorized reseller or go to https://shop.qnap.com.
- The QNAP TPAD-M2SSD-04 thermal pads are recommended. The TPAD-M2SSD-04 includes thick and thin thermal pads for installing single-sided and double-sided SSDs.

Important

Do not install thermal pads directly on the SSD. The M.2 SSD adapter does not have sufficient space to accommodate an SSD with thermal pads attached. Install thermal pads on the drive tray in the area unobstructed by the adapter.

a. Install a thick thermal pad on the drive tray.

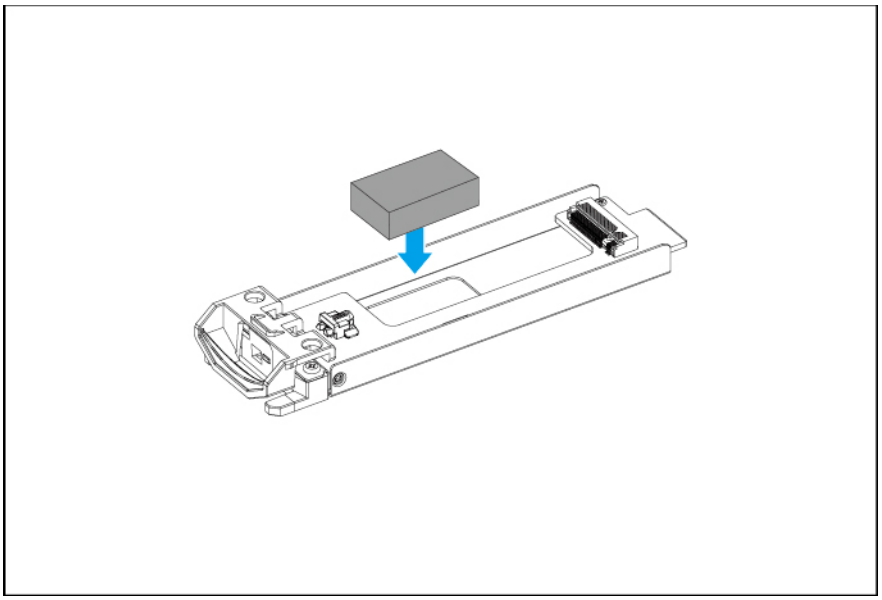

b. Install a thin thermal pad on top of the thick thermal pad.

> **Note**
> This step is for single-sided SSDs only. Skip this step if you are installing a double-sided SSD.

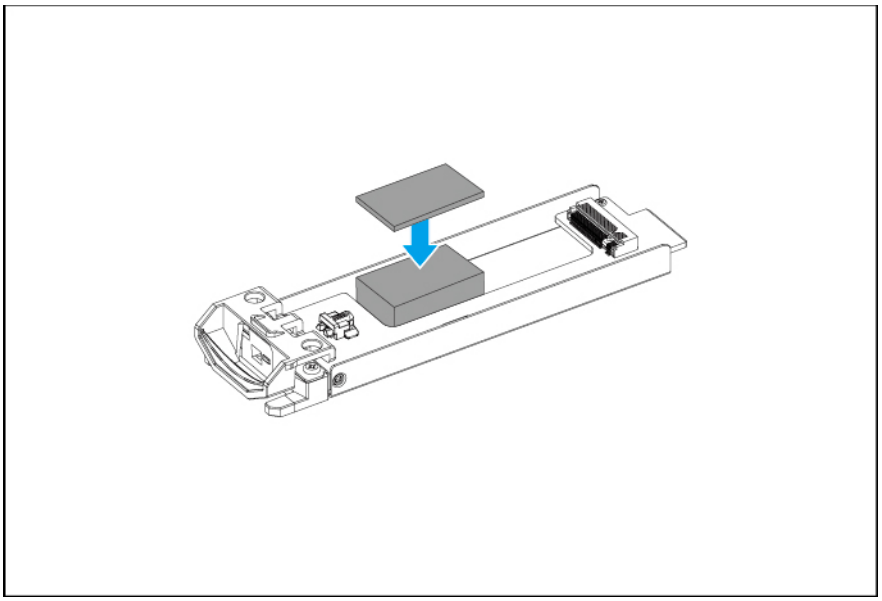

4. Install the M.2 SSD.

   a. Insert the M.2 SSD into the slot.

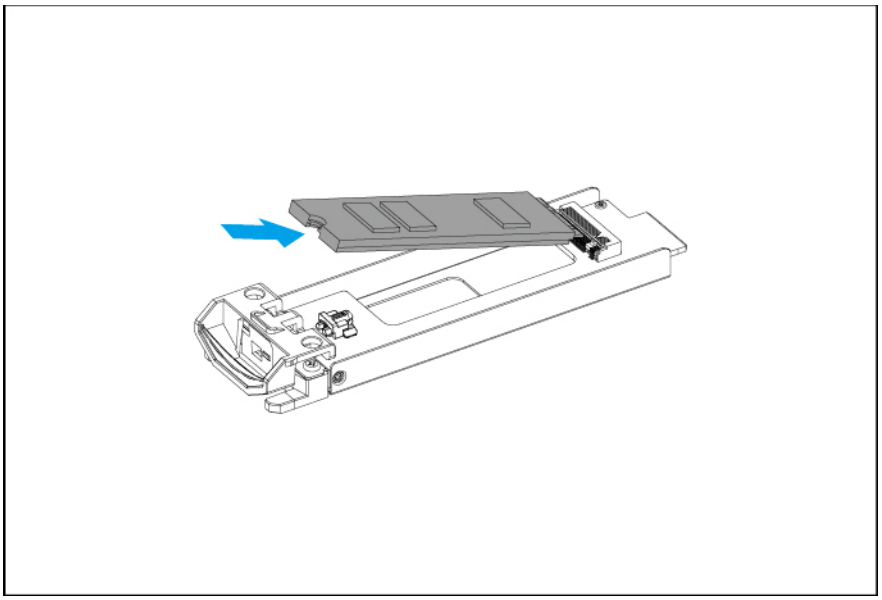

   b. Carefully press down the M.2 SSD.

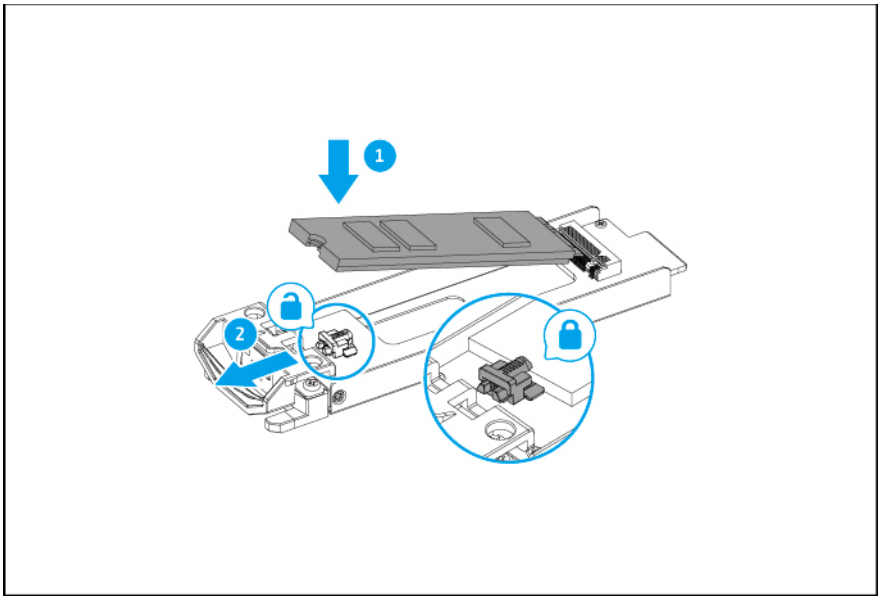

5. Insert the tray into the bay.

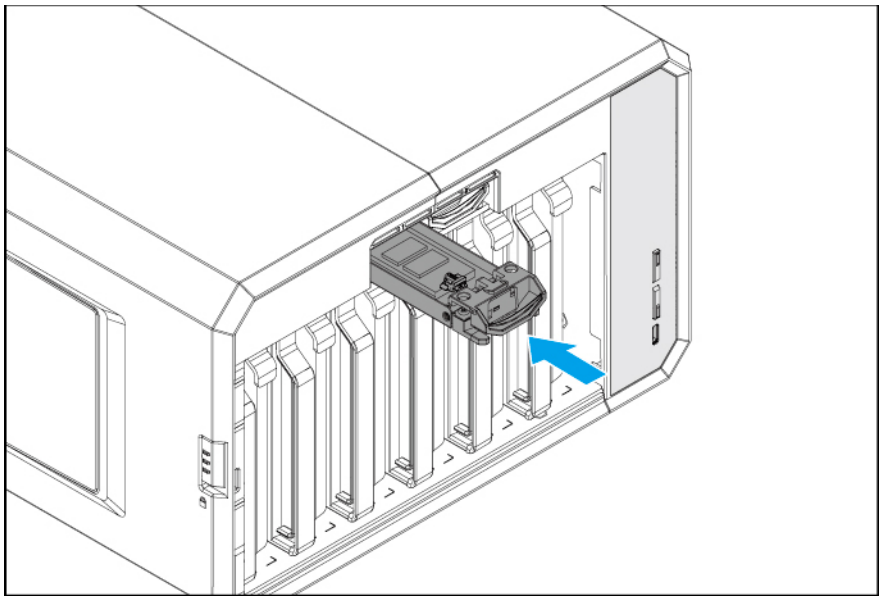

6. Attach the front cover.

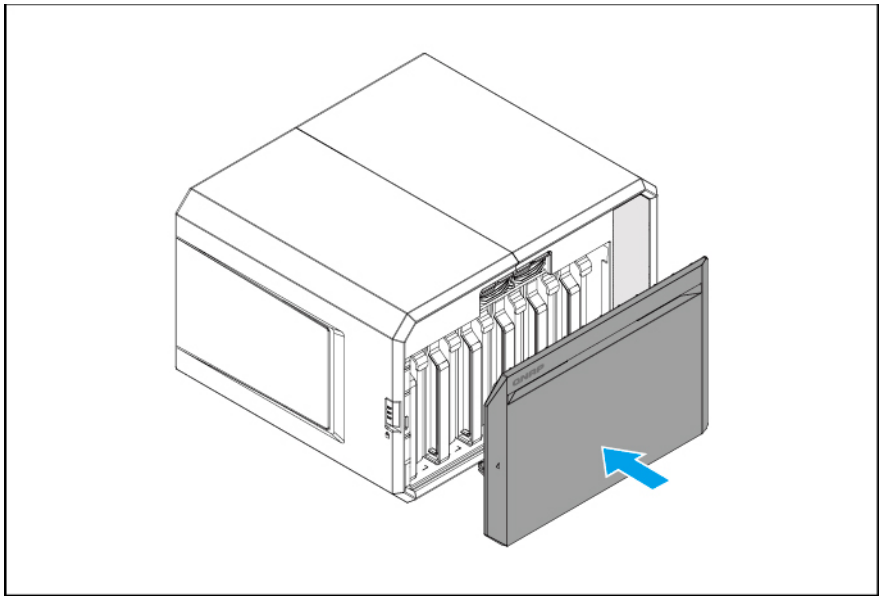

7. Slide the lock down to secure the front cover.

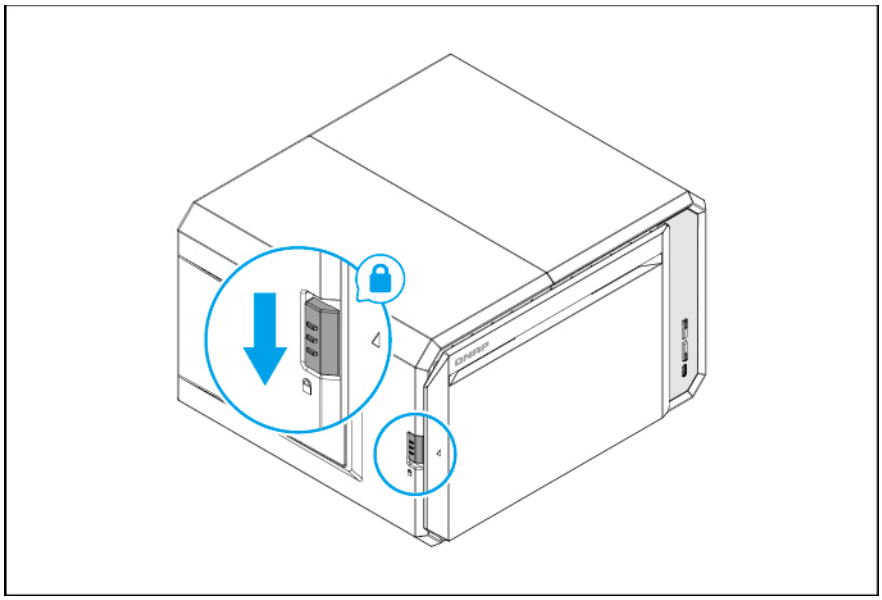

Installing 5.9 mm E1.S solid-state drives

For a list of compatible E1.S SSDs, go to https://www.qnap.com/compatibility.

Warning

- Installing a drive deletes all data on the drive.
- Observe electrostatic discharge (ESD) procedures to avoid damage to components.

1. Remove the front cover.
   a. Locate the locking mechanism on the left side of the device.

b. Slide the lock up to release the front cover.

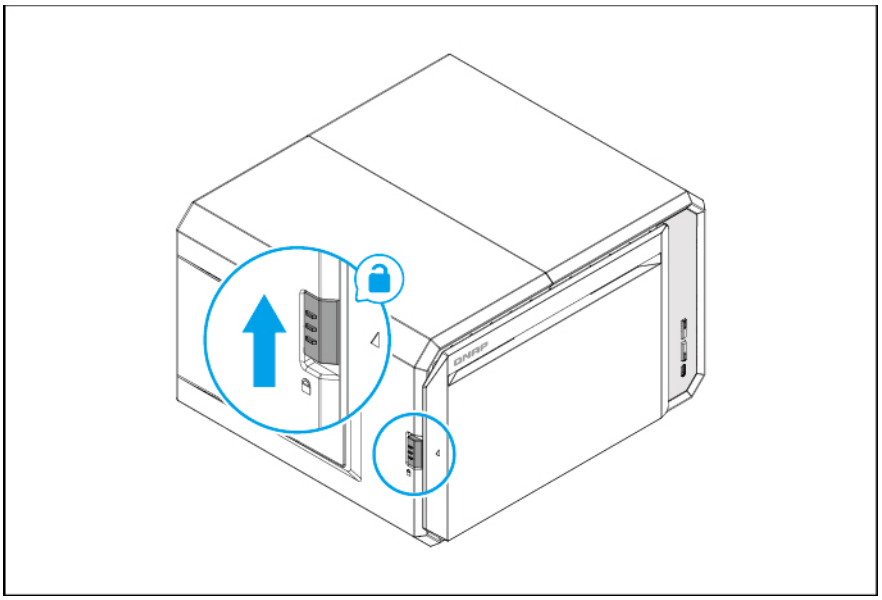

c. Pull the front cover away from the device.

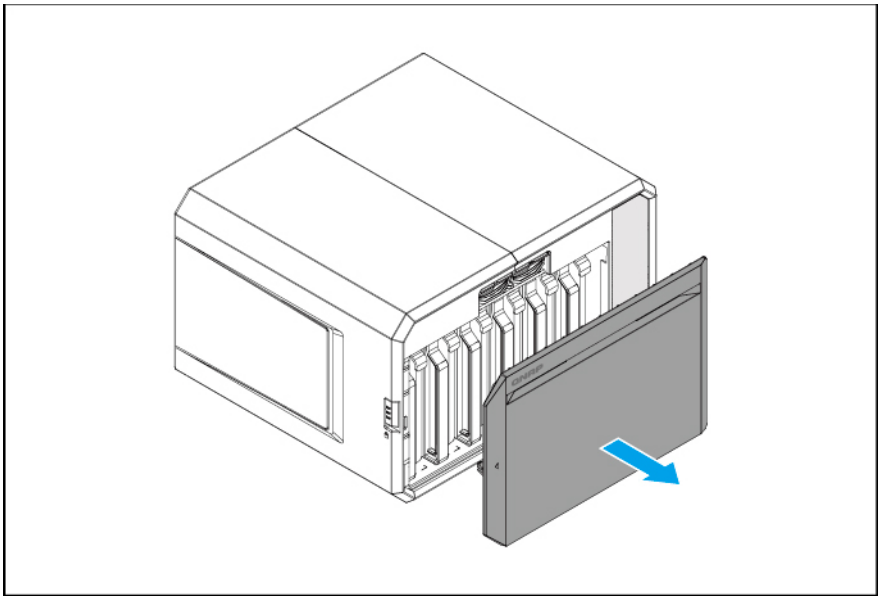

2. Remove the drive tray.

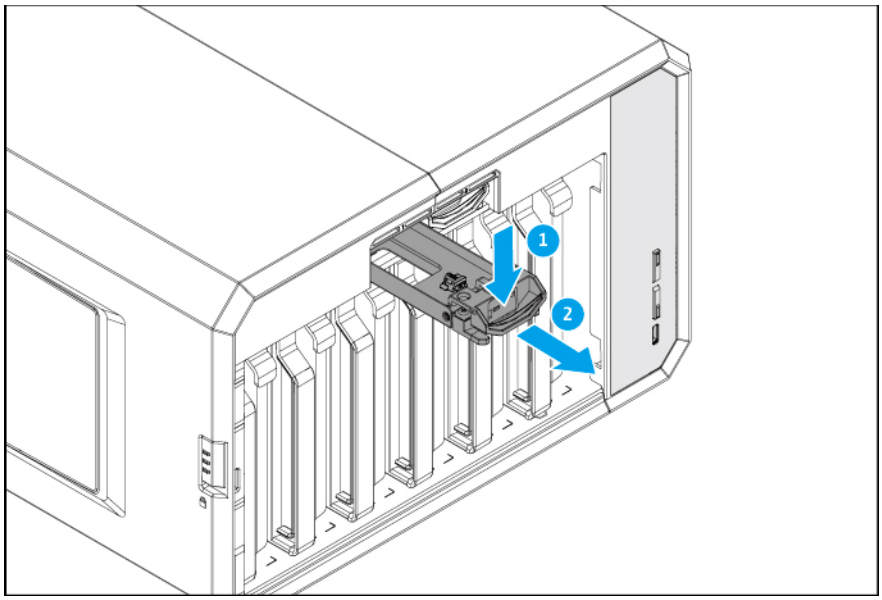

3. Install the E1.S SSD.

   a. Remove the screws that secure the M.2 SSD adapter to the tray frame.

   b. Remove the M.2 SSD adapter.

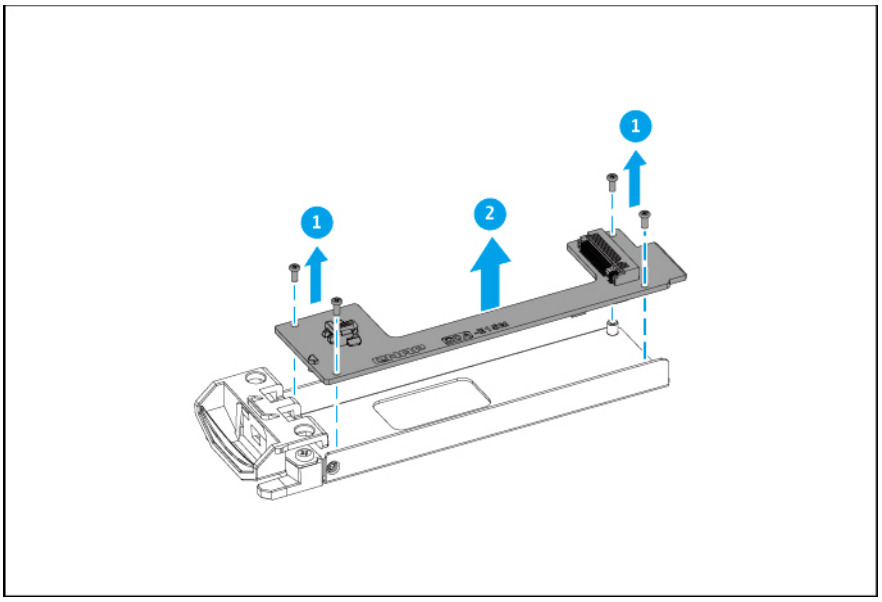

   c. Place the drive on the tray frame so that the holes on the drive align with the holes on the tray frame.

d. Attach the screws that secure the drive to the tray frame.

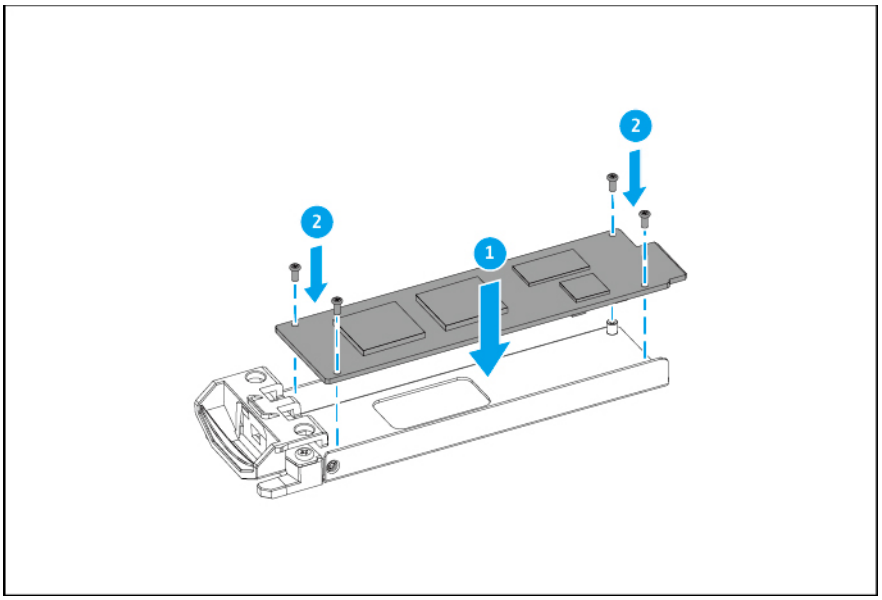

4. Insert the tray into the bay.

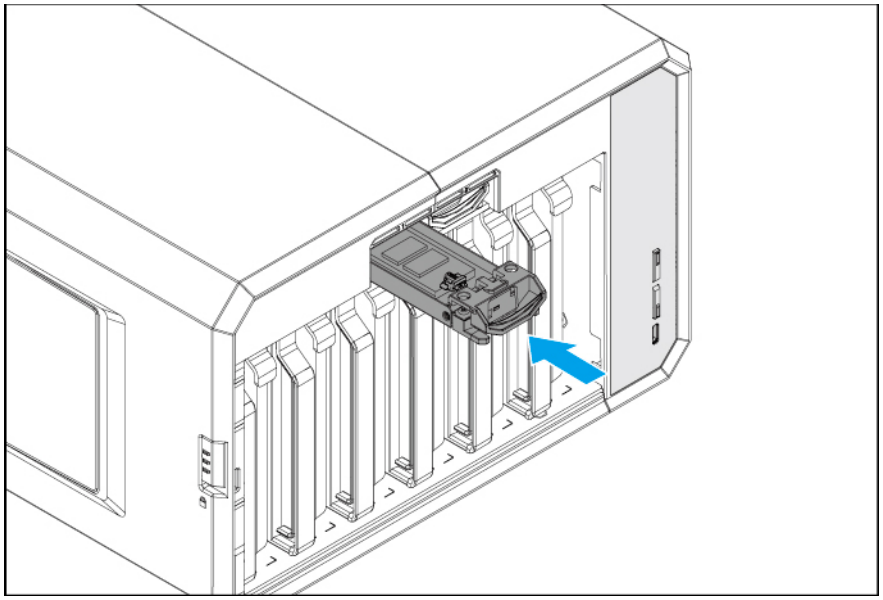

5. Attach the front cover.

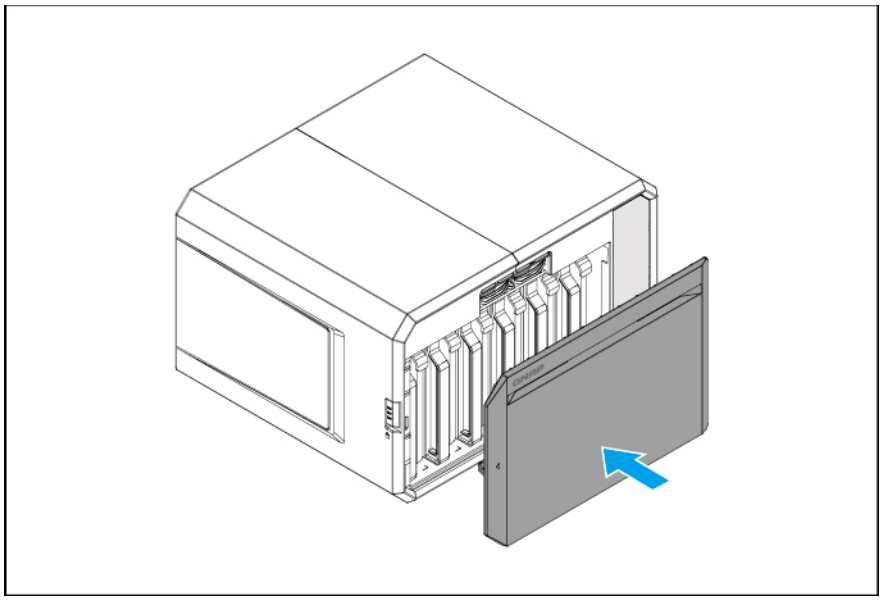

6. Slide the lock down to secure the front cover.

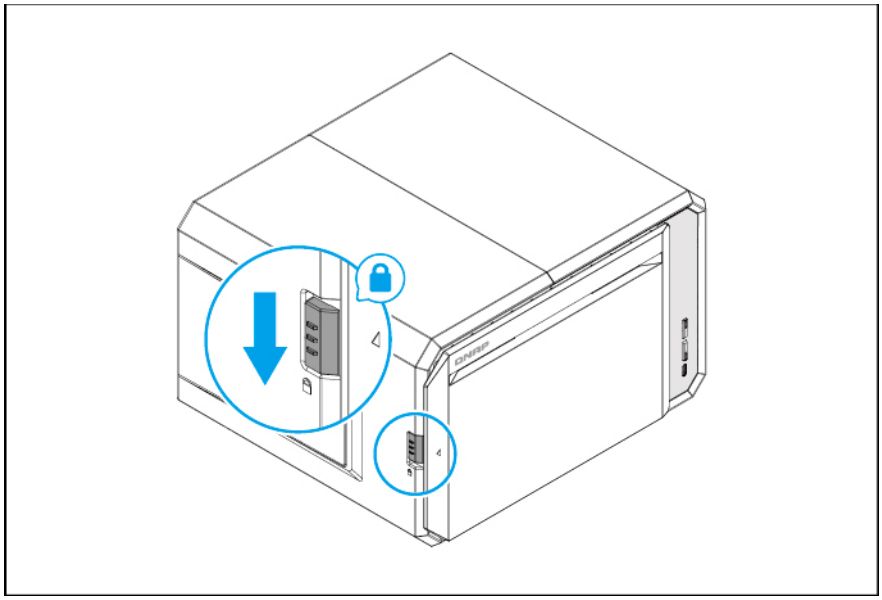

Installing 9.5 mm and 15 mm E1.S solid-state drives

For a list of compatible E1.S SSDs, go to https://www.qnap.com/compatibility.

Warning

- Installing a drive deletes all data on the drive.
- Observe electrostatic discharge (ESD) procedures to avoid damage to components.

1. Remove the front cover.
   a. Locate the locking mechanism on the left side of the device.
   b. Slide the lock up to release the front cover.

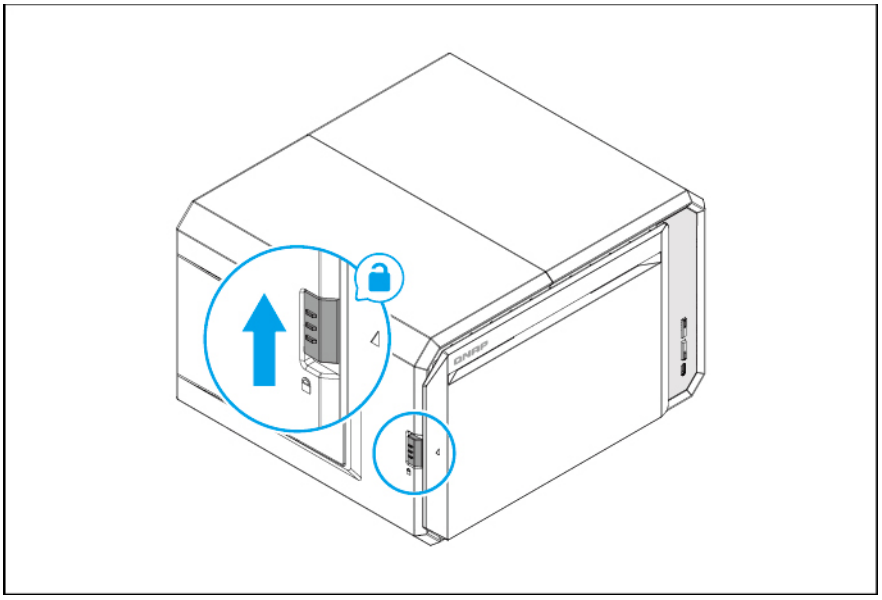

   c. Pull the front cover away from the device.

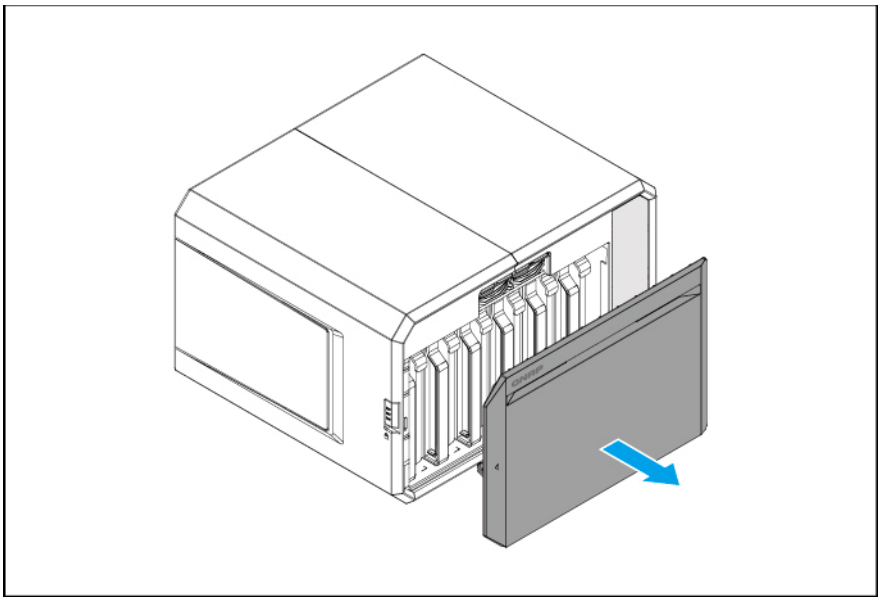

2. Remove the drive tray.

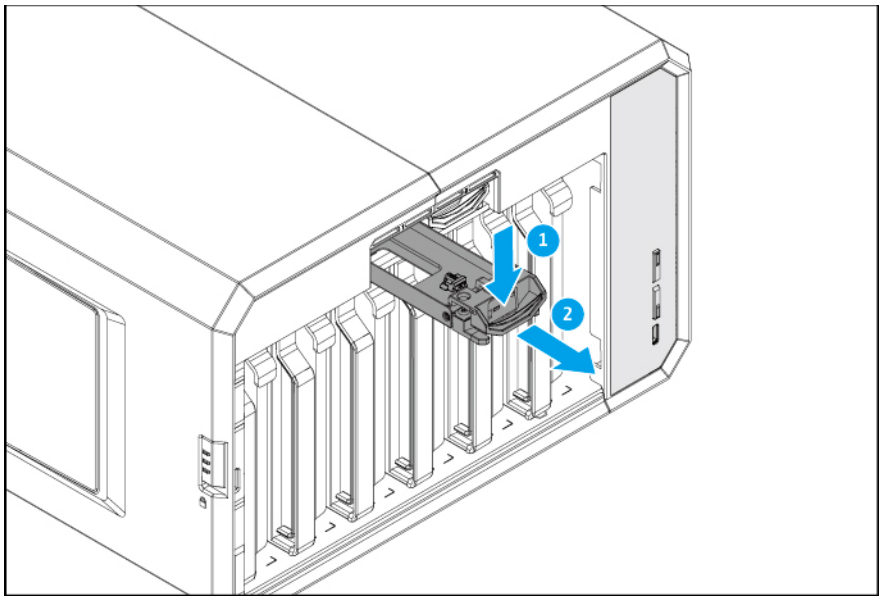

3. Remove the drive tray base from the drive tray.

   a. Remove the screws that secure the tray base to the drive tray.

   b. Pull the tray base off the drive tray.

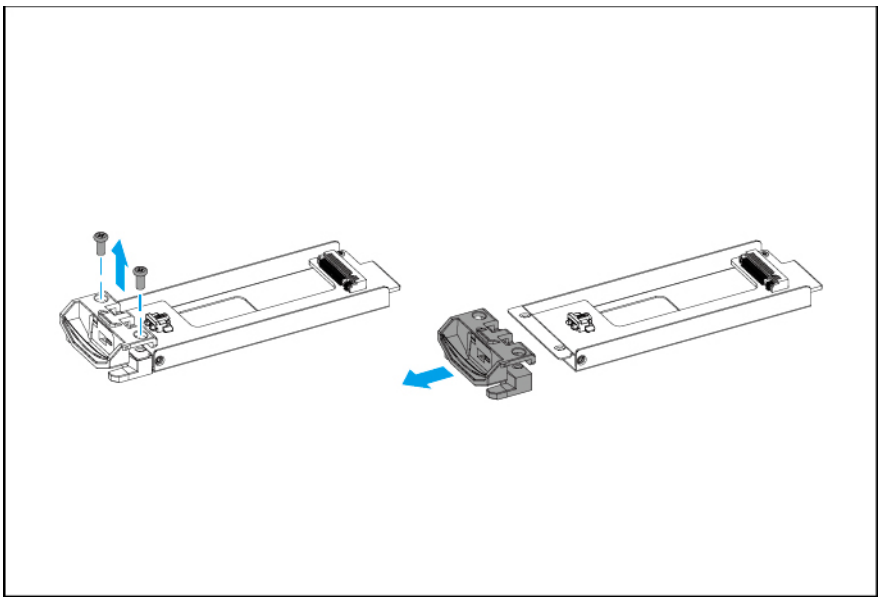

4. Install the E1.S SSD.

   a. Place the drive on the tray base so that the holes on the drive align with the holes on the tray base.

b. Attach the screws that secure the drive to the tray base.

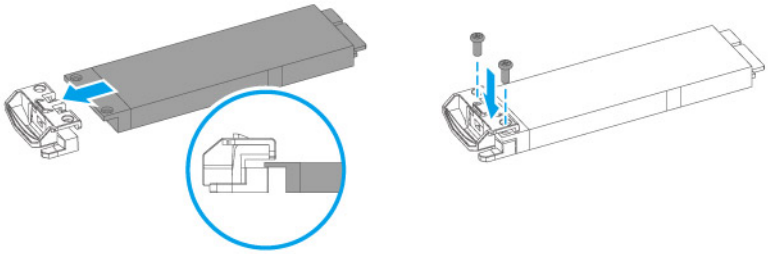

5. Insert the tray into the bay.

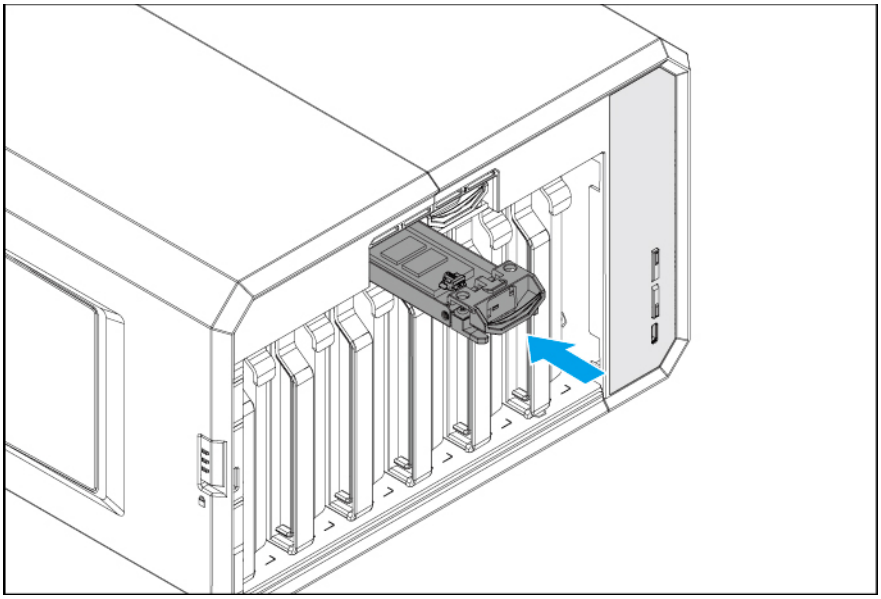

6. Attach the front cover.

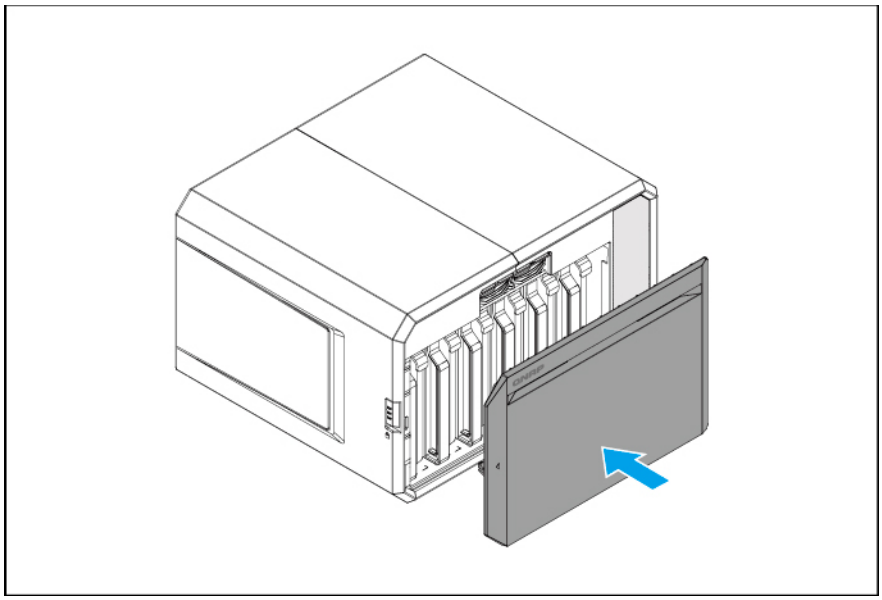

7. Slide the lock down to secure the front cover.

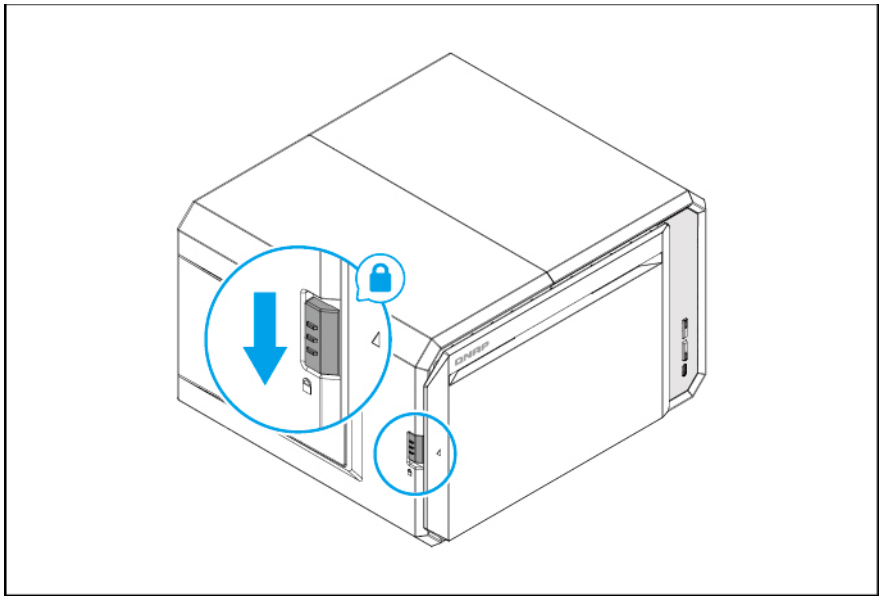

Replacing memory modules

The TS-hx65 has one memory slot. You can increase the memory capacity of the NAS by upgrading the memory module.

Use only QNAP memory modules to maintain system performance and stability. You can purchase QNAP memory modules from authorized resellers.

Warning

-
  Moving fan blades: Keep your hands and other body parts away from moving fan blades.
-
  Other moving components: Keep your hands and other body parts away from other moving components.
- Observe electrostatic discharge (ESD) procedures to avoid damage to components.

1. Power off the device.
2. Disconnect the power cord from the electrical outlet.
3. Disconnect all cables and external attachments.
4. Locate the locking mechanism on the left side of the device.
5. Slide the lock up to release the front cover.

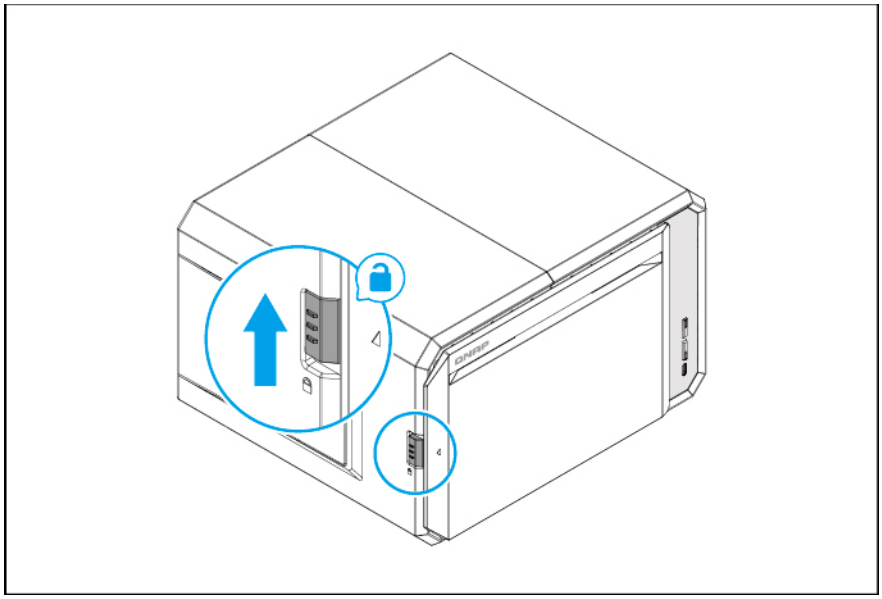

6. Place the device on its left side.

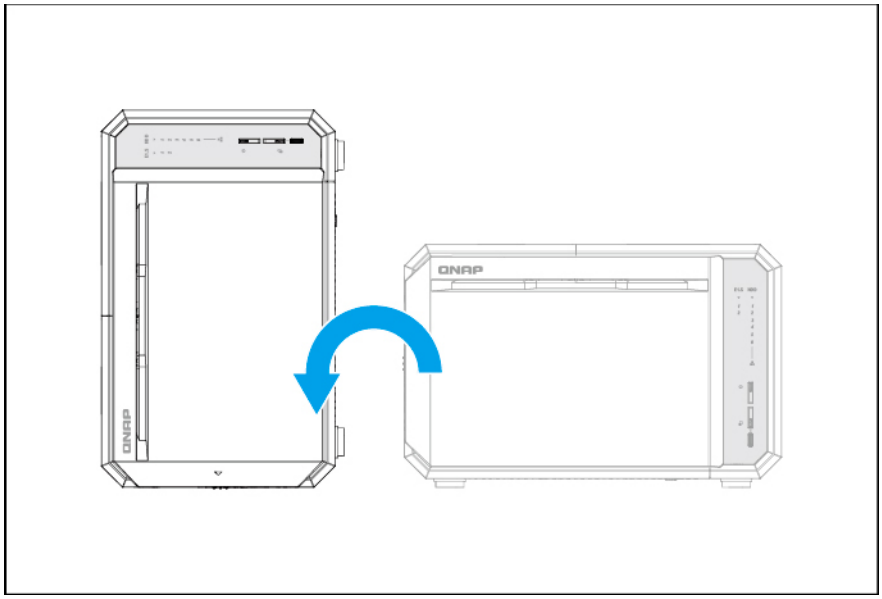

7. Pull the front cover away from the device.

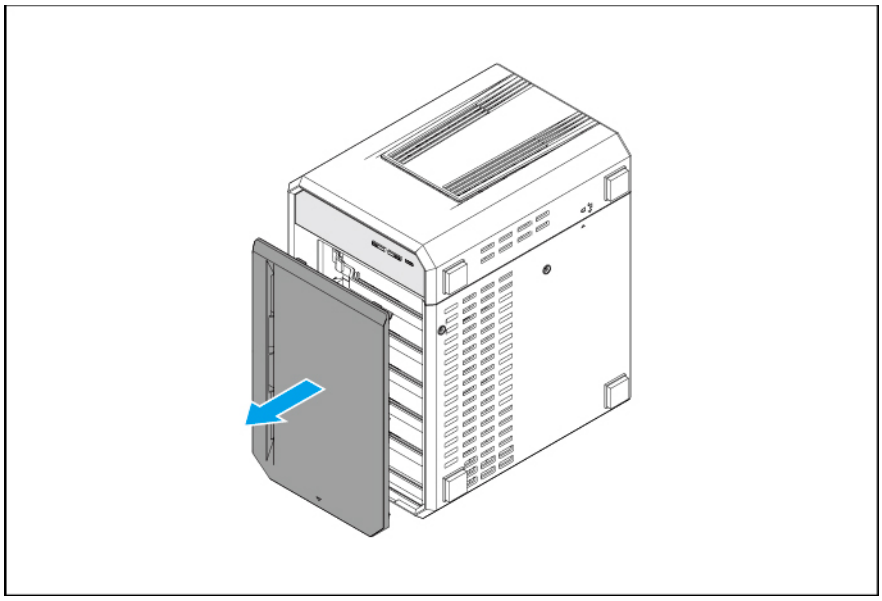

8. Remove the case cover.

   a. Remove the screws that secure the cover to the chassis.

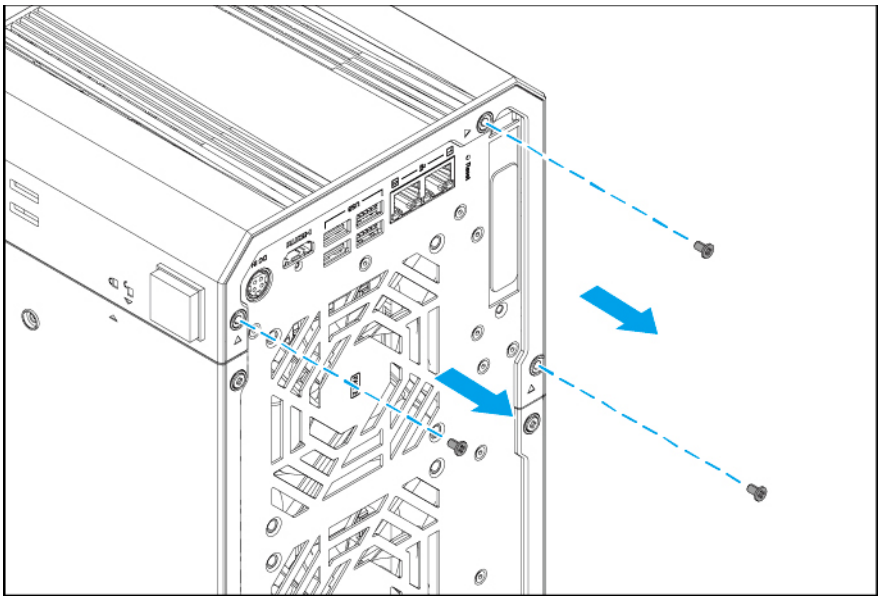

   b. Slide the cover back.

   c. Lift the cover off the device.

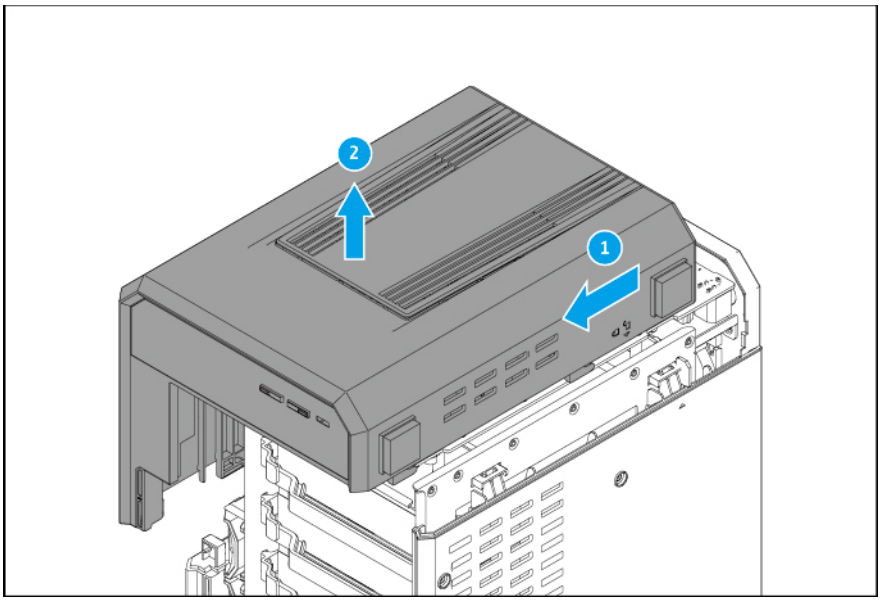

9. Optional: Remove the installed memory module.

   a. Push the retention clips outward simultaneously to release the module.

   b. Verify that the module has tilted upward and is completely released from the slot.

> **Warning**
> Attempting to remove a module that is not completely released may damage the module and the system board.

c. Hold the module by the edges.

d. Carefully slide the module out of the slot.

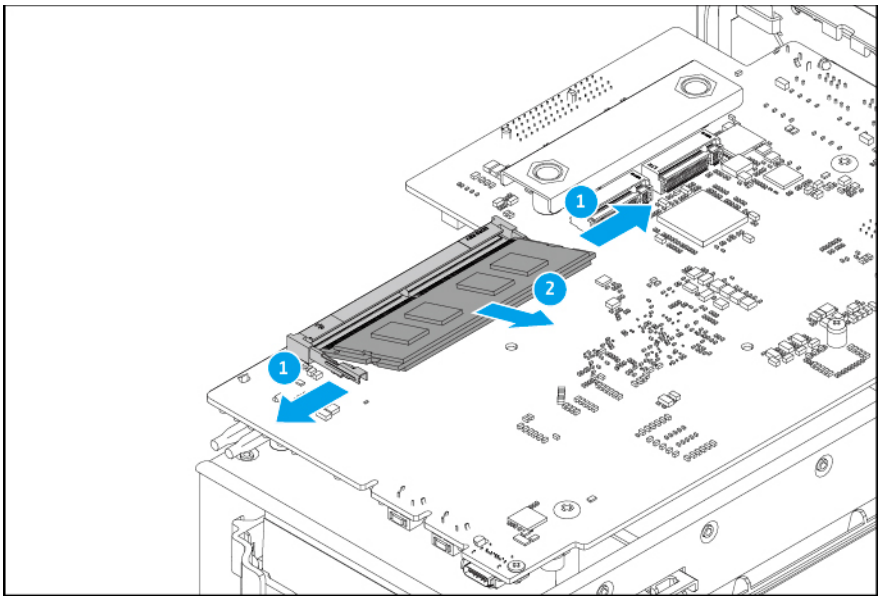

Warning

- Do not touch the internal components, particularly the metal connectors.
- Do not bend the module.

10. Install a new module.

a. Align the notch with the ridge in the slot.

b. Insert the module into the slot.

c. Verify that the metal connectors are completely inserted into the slot.

d. Carefully press down on the module until the retention clips lock the module into place.

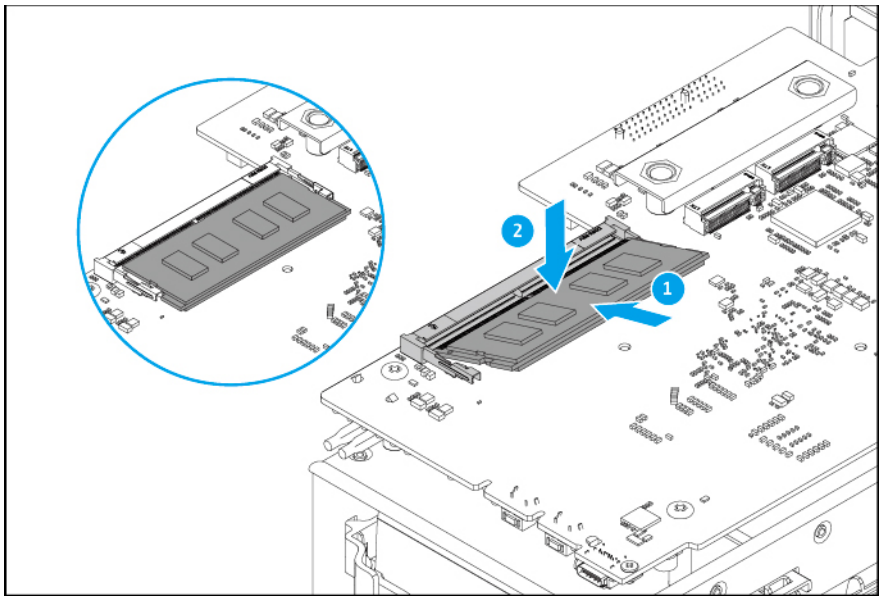

11. Attach the case cover.

a. Place the cover on the device.

b. Slide the cover forward.

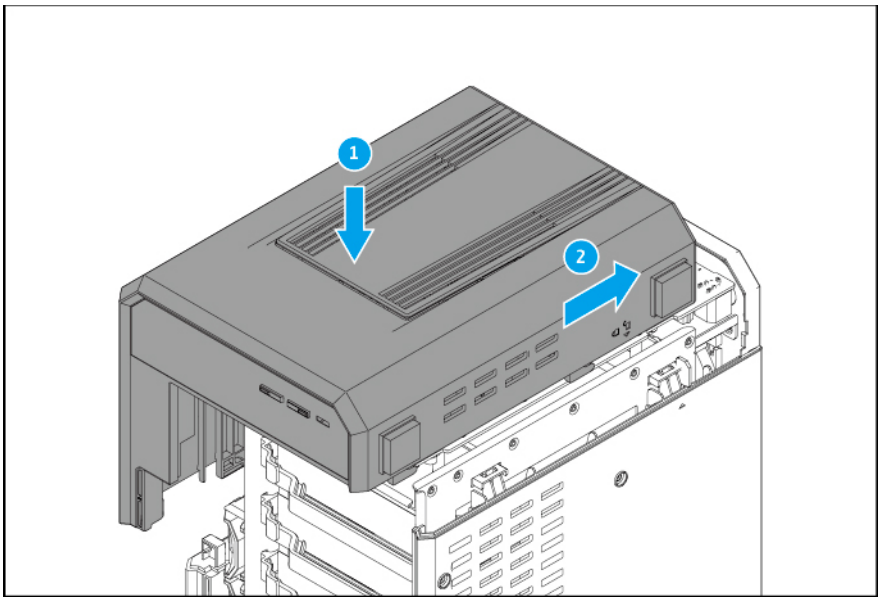

c. Attach the screws that secure the cover to the chassis.

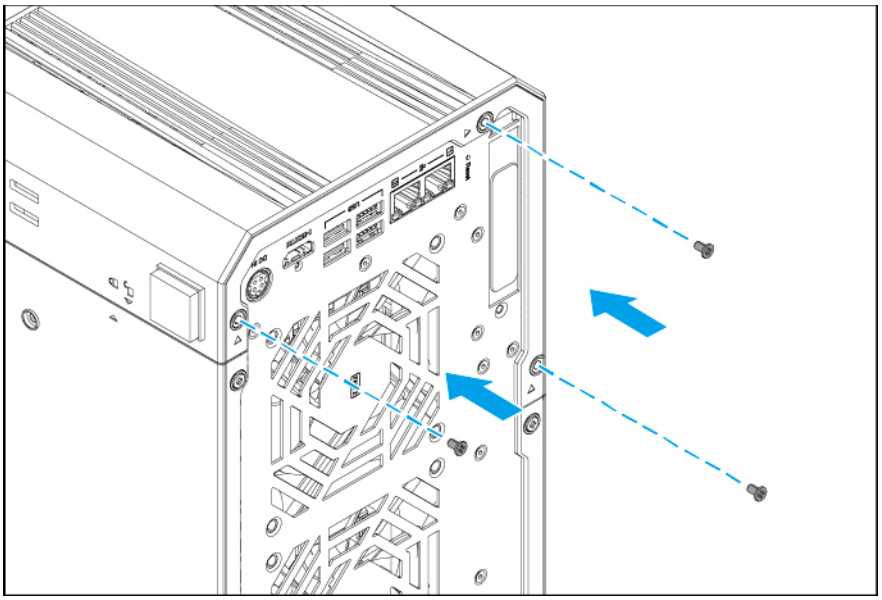

12. Attach the front cover.

a. Align the front cover with the grooves on the case and then slide to the right.

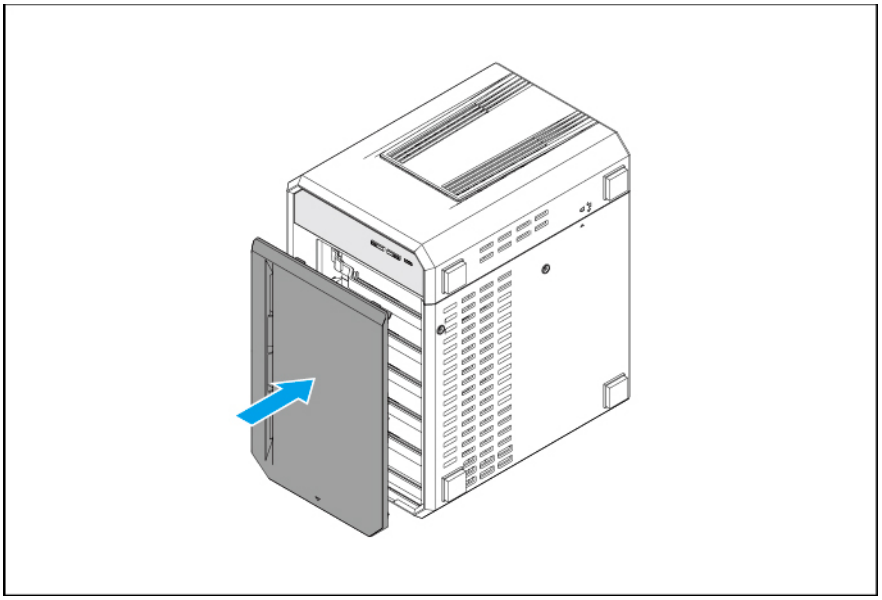

13. Place the device into its normal upright position.

14. Slide the lock down to secure the front cover.

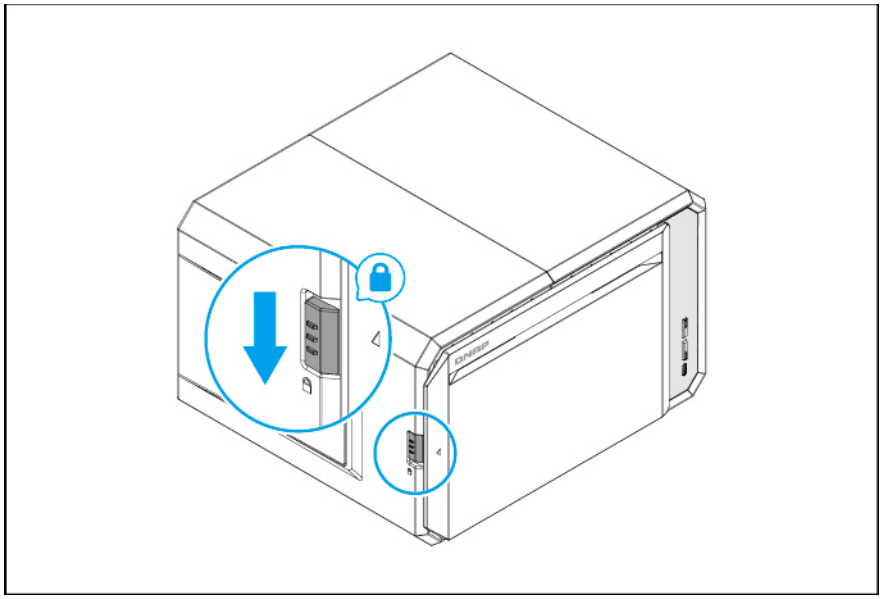

15. Connect all cables and external attachments.
16. Power on the device.
17. Verify that the module is recognized by the device.
    a. Log on to QuTS hero as an administrator.
    b. Go to **Control Panel** > **System** > **System Status** > **Hardware Information**.
    c. Check the value for **Total memory**.

Installing expansion cards

The NAS supports selected expansion cards. QNAP-branded expansion cards purchased from the company website are shipped with the brackets necessary to fit this NAS.

Warning

- Only qualified personnel should perform the following steps. Failure to follow instructions can result in serious injury or death.
- Observe electrostatic discharge (ESD) procedures to avoid damage to components.
-
  Moving fan blades: Keep your hands and other body parts away from moving fan blades.
-
  Other moving components: Keep your hands and other body parts away from other moving components.

1. Power off the device.
2. Disconnect the power cord from the electrical outlet.
3. Disconnect all cables and external attachments.
4. Locate the locking mechanism on the left side of the device.
5. Slide the lock up to release the front cover.

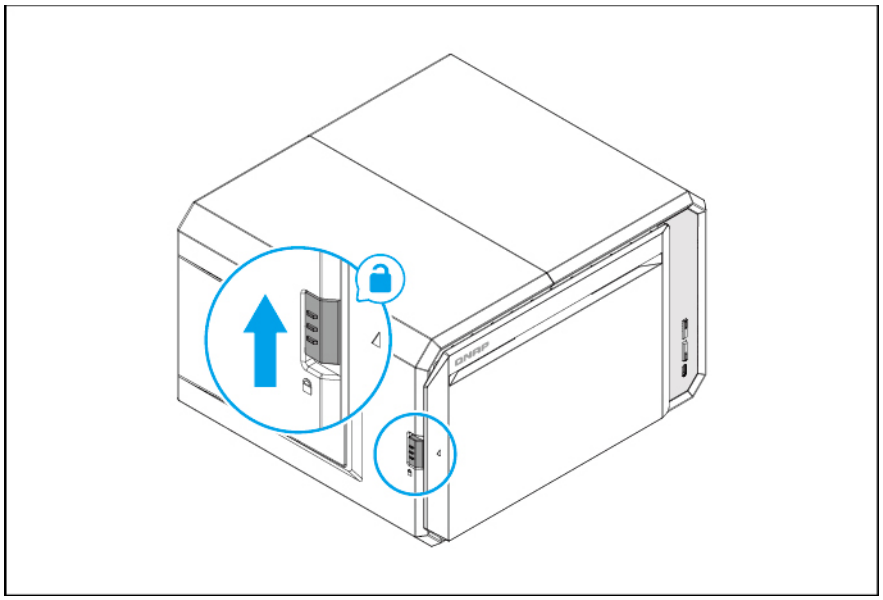

6. Place the device on its left side.

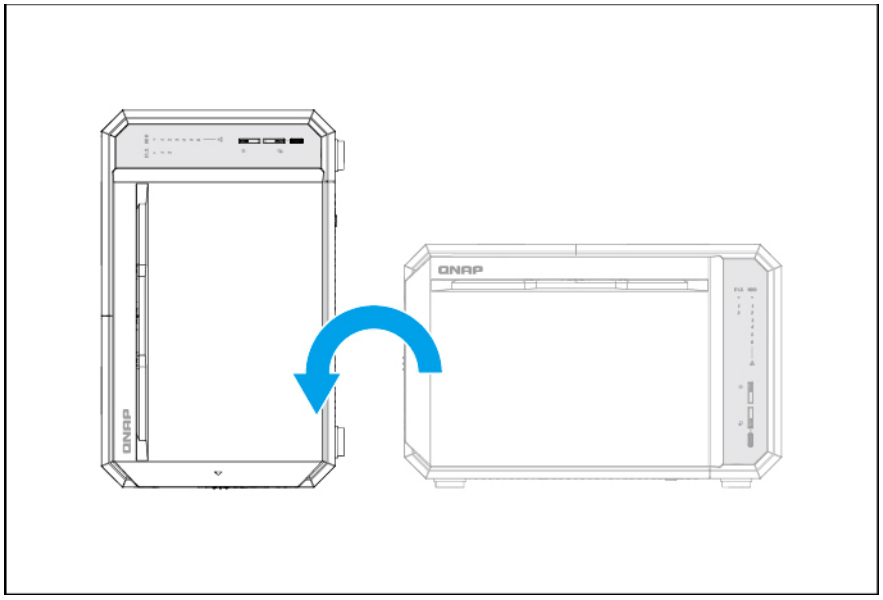

7. Pull the front cover away from the device.

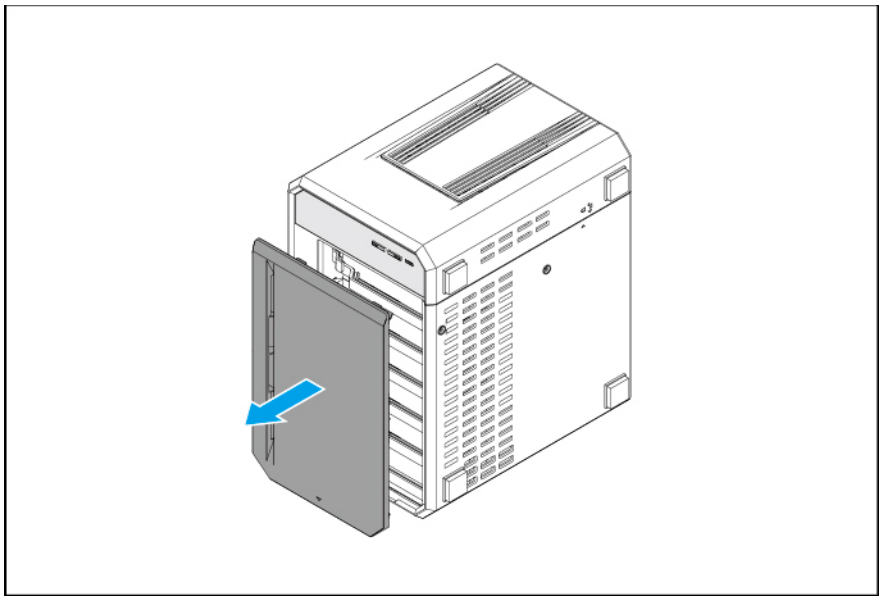

8. Remove the case cover.

   a. Remove the screws that secure the cover to the chassis.

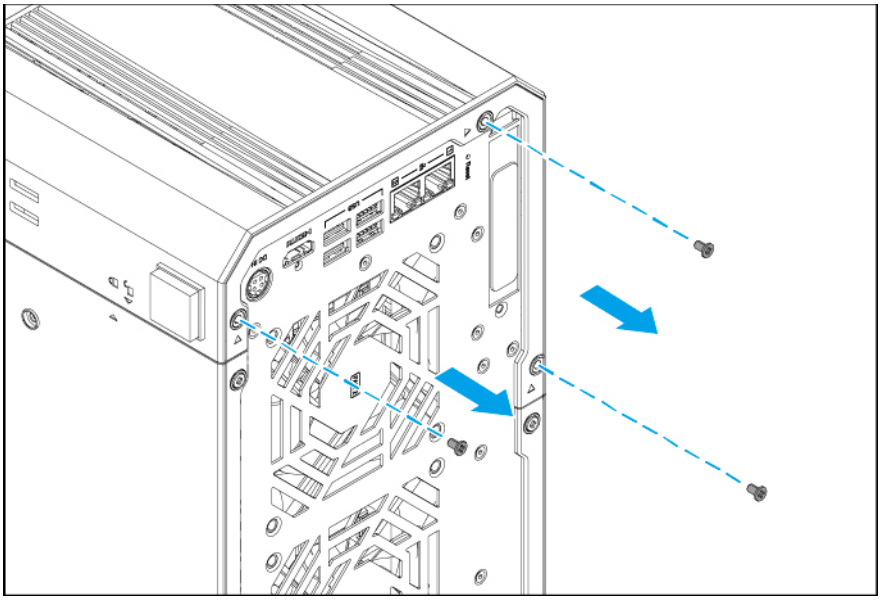

   b. Slide the cover back.

c. Lift the cover off the device.

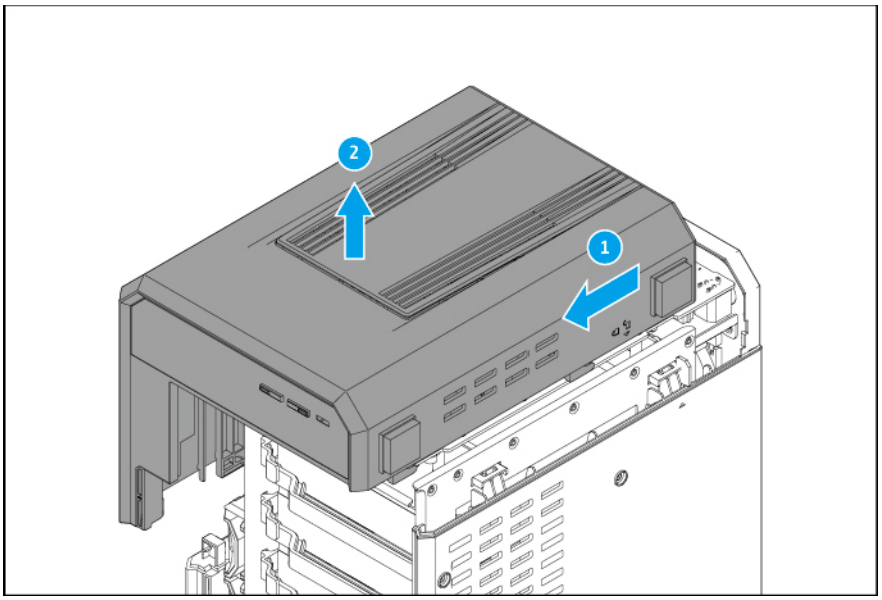

9. Remove the PCIe cover.

a. Remove the screw that secures the cover to the bracket.

b. Pull the cover away from the slot.

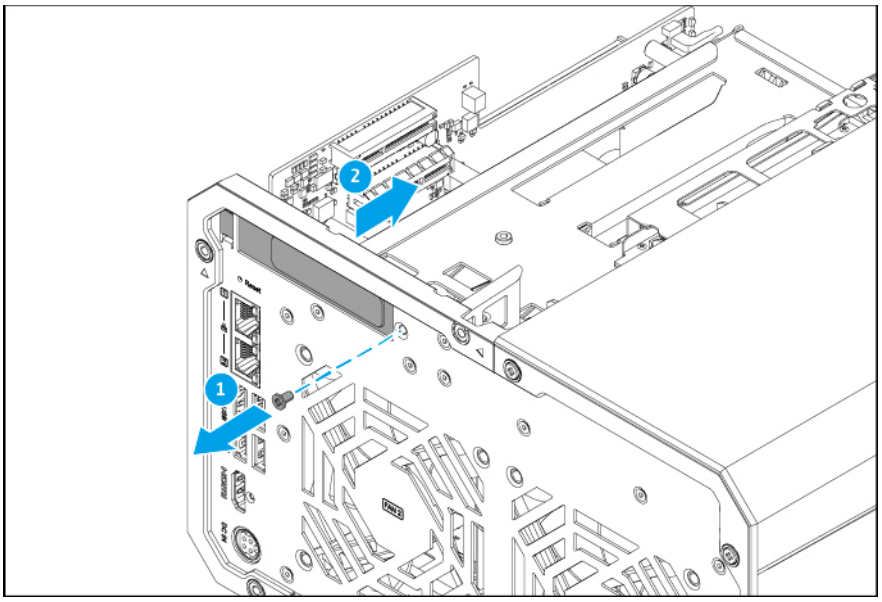

10. Optional: Attach the full-height bracket to the expansion card.

a. Remove all screws of the existing bracket.

b. Carefully pull the bracket away from the card.

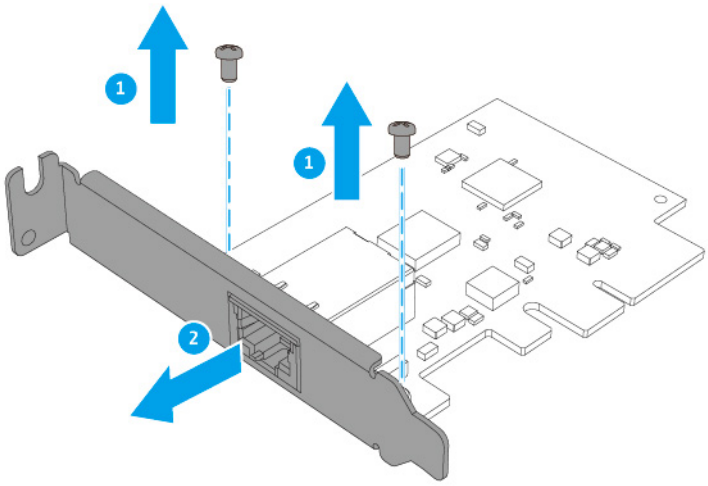

c. Attach the full-height bracket to the card using the same screws.

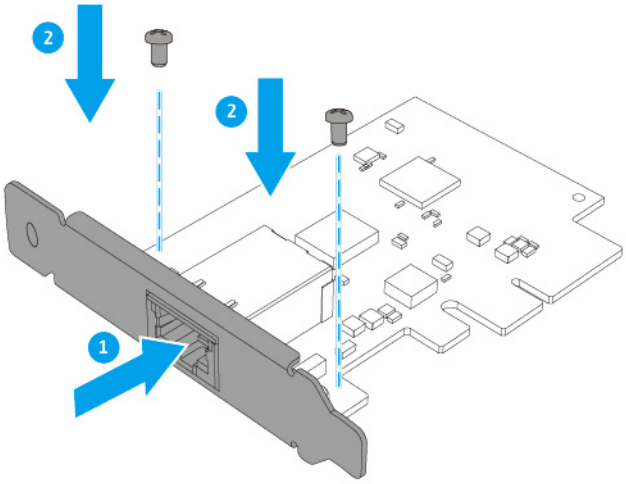

d. Verify that the bracket is secured to the card.

11. Install the expansion card.

a. Hold the card by the edges.

b. Insert the card into the slot.

c. Attach the screw.

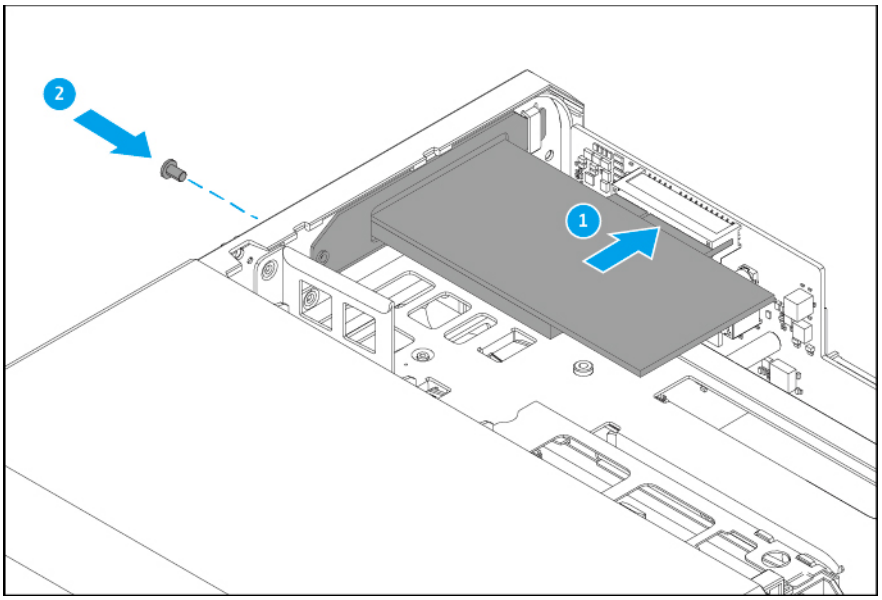

12. Attach the case cover.

a. Place the cover on the device.

b. Slide the cover forward.

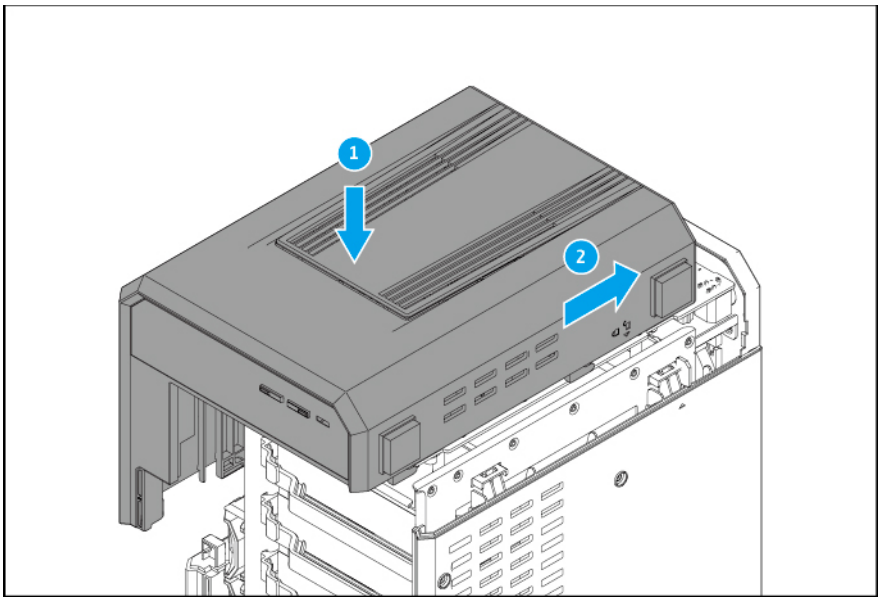

c. Attach the screws that secure the cover to the chassis.

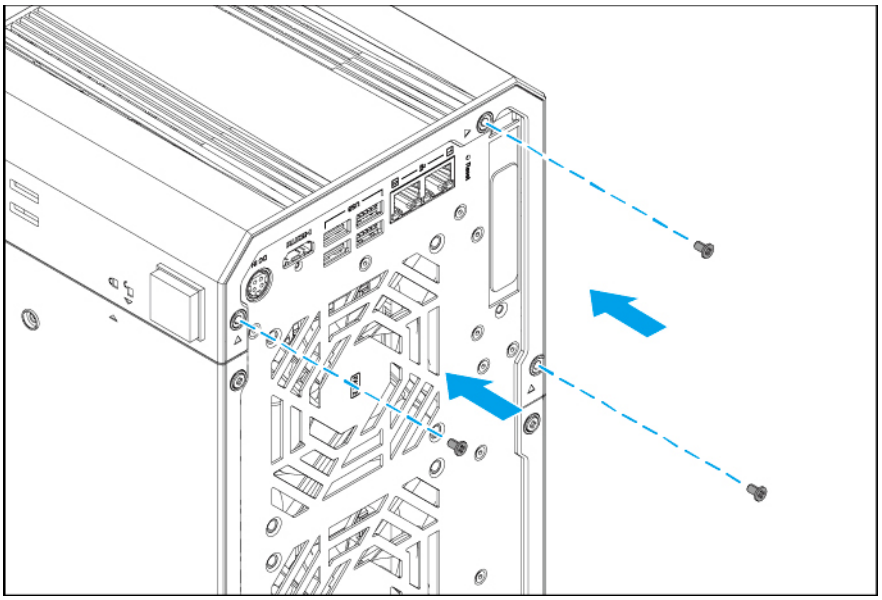

13. Attach the front cover.

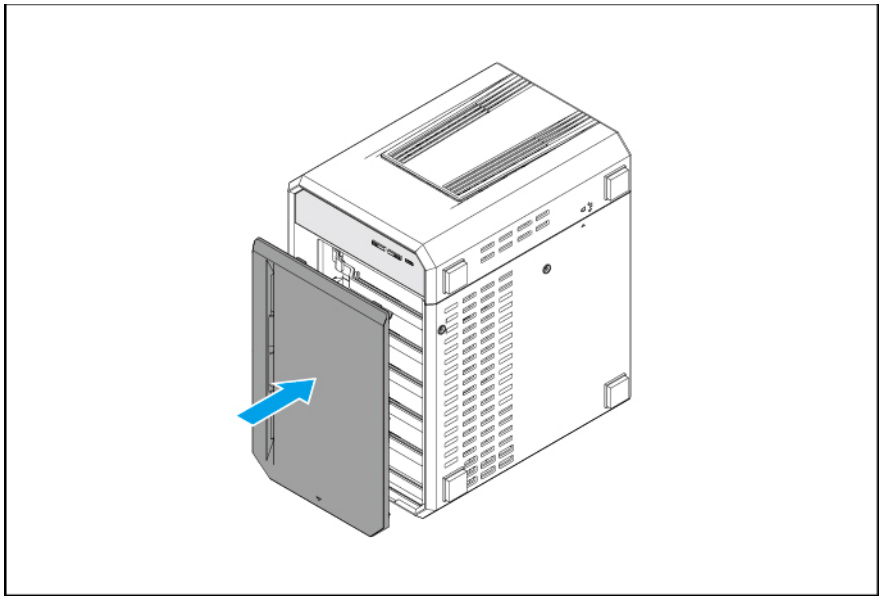

14. Place the device into its normal upright position.

15. Slide the lock down to secure the front cover.

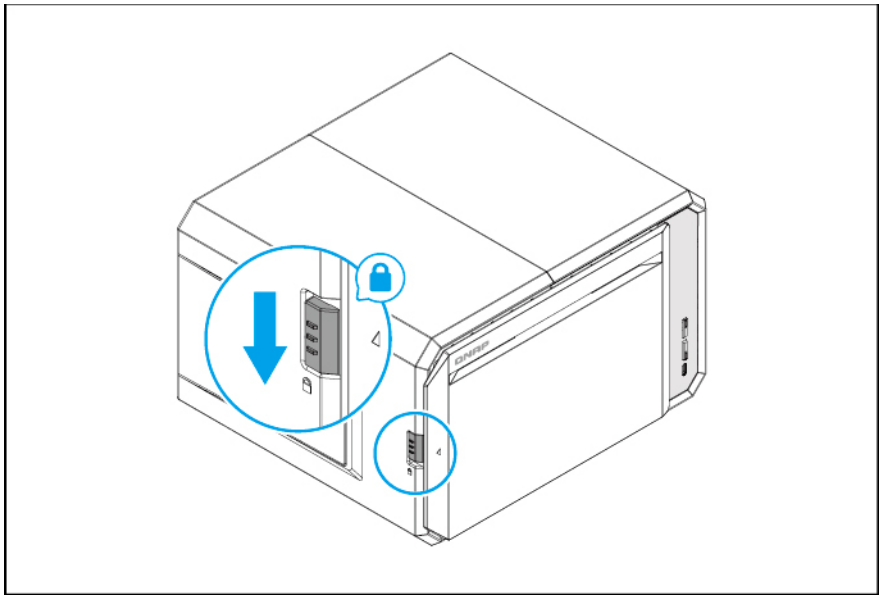

16. Connect all cables and external attachments.
17. Connect the power cord to the electrical outlet.
18. Power on the NAS.

Connecting USB expansion units

The NAS supports five USB expansion units. For details, please see the table below.

You can purchase storage expansion accessories from QNAP or an authorized reseller.

For details, go to https://shop.qnap.com/.

For the list of compatible expansion units and the maximum number of applicable expansion units, go to https://www.qnap.com/go/compatibility-expansion.

Expansion Unit Model	Description	Required Accessories
TR-002	• Uses a USB 3.2 Gen 2 Type-C interface • Supports SATA HDD/SSD	USB 3.2 Gen 2 Type-A to Type-C cable
TR-004	• Uses a USB 3.2 Gen 1 Type-C interface • Supports SATA HDD/SSD	USB 3.2 Gen 2 Type-A to Type-C cable

Expansion Unit Model	Description	Required Accessories
TL-D810TC4	• Uses a USB4 Type-C interface • Supports SATA HDD/SSD	• QXP-40G2UC host bus adapter • USB4 Type-C to Type-C cable

1. Power off the NAS.
2. Connect the expansion unit to the NAS.
   a. Connect the USB cable to the USB Type-C port on the expansion unit.
   b. Connect the USB cable to the USB Type-A port on the rear panel of the NAS.

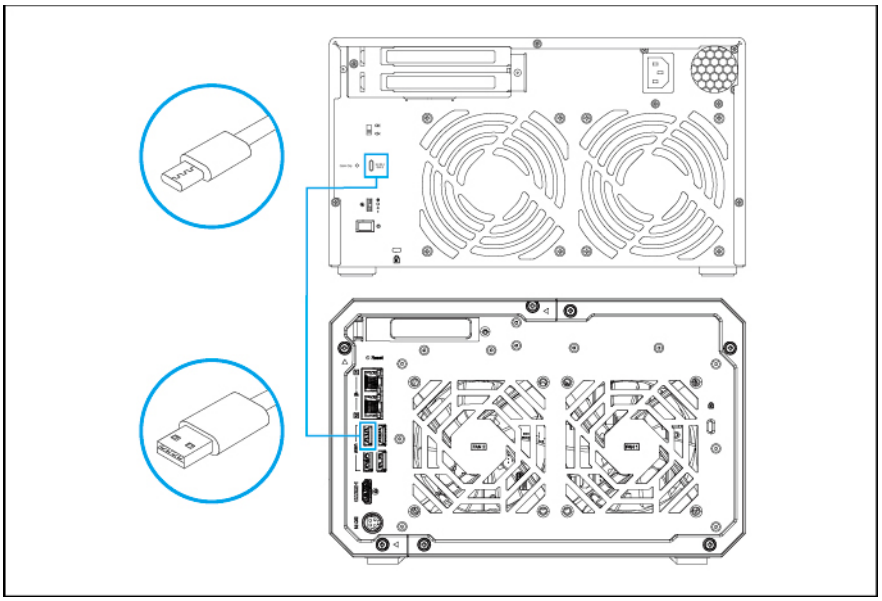

3. Power on the expansion unit.
4. Power on the NAS.
5. Verify that the expansion units are recognized by the NAS.
   a. Log on to QuTS hero as an administrator.
   b. Go to **Storage & Snapshots** > **Overview** > **System**.
   c. Verify that the expansion unit is listed.

4. QuTS hero installation

Method	Description	Requirements
Qfinder Pro installation (Recommended)	If the NAS is connected to your local area network, you can do the following: • Locate the NAS using Qfinder Pro. • Complete the steps in the Smart Installation Guide wizard.	• Computer • Network cable • Qfinder Pro installer
Cloud installation	If the NAS is connected to the internet, you can do the following: • Scan the QR code on the NAS. • Specify the Cloud Key. • Log into your myQNAPcloud account. • Use myQNAPcloud Link to remotely access your NAS. • Complete the steps in the Smart Installation Guide wizard.	• Computer or mobile device • myQNAPcloud account • Cloud Key

Initializing QuTS hero using Qfinder Pro

You can initialize QuTS hero using Qfinder Pro, which is a utility designed to help you locate and manage QNAP devices on your network.

Warning
Installing QuTS hero deletes all data on the drives. Back up your data before proceeding.

1. Power on the device.
2. Connect the device to your local area network.
3. Run Qfinder Pro on a computer that is connected to the same local area network.

   Note
   To download Qfinder Pro, go to https://www.qnap.com/utilities.

4. Locate the NAS in the list and then double-click the name or IP address.
   The **Smart Installation Guide** opens in the default web browser.

5. If the screen shows a different operating system, click **QuTS hero**.

> **Note**
> This step is only required if the NAS supports installing more than one operating system and the default operating system for installation is not QuTS hero.

The NAS restarts and the smart installation screen shows QuTS hero as the operating system to install.

6. Click **Start Smart Installation Guide**.
The **Install Firmware** window appears.

7. Install firmware using any of the following methods:

Installation methods	Steps
Automatic	Click **Start**. Automatically searches for available firmware updates and installs firmware.
Manual installation	**a.** Click **Manual Installation**. The **Install Firmware** window appears. **b.** Click **Browse**. The upload file window appears. **c.** Select file. **d.** Click **Open**. Starts firmware installation.
Skip	Click **Skip**. Skips firmware installation.

8. Specify the following information

- **NAS name**: Specify a name with 1 to 14 characters. The name supports letters (A to Z, a to z), numbers (0 to 9), and hyphens (-), but cannot end with a hyphen.
- **Username**: Specify an administrator username that contains 1 to 32 characters. The name can contain letters (A to Z, a to z), numbers (0 to 9), and hyphens (-), multi-byte Chinese, Japanese, Korean, and Russian characters.
The username cannot contain the following special characters: grave accent (`), asterisk (*), equal sign (=), plus sign (+), square brackets ([ ]), curly brackets ({}), slash (\), vertical bar (|), semicolon (;), colon (:), apostrophe ('), quotation mark ("), comma (,), less than sign (<), greater than sign (>), backslash (/), question mark (?), percent sign (%), dollar sign ($), and the space character.

> **Important**
> To protect your NAS from brute force attacks, create a new system administrator account during QuTS hero initialization to disable the default "admin" account.

- **Password**: Specify an administrator password with 1 to 64 characters. The password supports all ASCII characters.

9. Click **Next**.
10. Specify the time zone, date, and time.

> **Tip**
> QNAP recommends connecting to an NTP server to ensure that the NAS follows the Coordinated Universal Time (UTC) standard.

11. Click **Next**.
    The **Configure the network settings** screen appears.
12. Select **Obtain an IP address automatically (DHCP)**.
13. Click **Next**.
14. Review the settings.
15. Click **Apply**.
    A confirmation message appears.

> **Warning**
> Clicking **Initialize** deletes all data on the drive before installing QuTS hero.

16. Click **Initialize**.
    QuTS hero initialization starts. It may take a few minutes to complete the process.
    After the initialization, you can click **Go to NAS Management** to start using QuTS hero and configuring other settings.

Initializing QuTS hero using the cloud installation website

You can initialize QuTS hero on the cloud installation website, which is designed to help you set up QNAP devices.

> **Warning**
> Initializing QuTS hero deletes all data on the drives. Back up your data before proceeding.

1. Power on the device.
2. Connect the device to the internet.

3. Go to the QNAP Cloud Installation website using one of the following methods:
   - On your computer, go to the website dedicated to your region.
     - Global: https://install.qnap.com
     - China: https://install.qnap.com.cn
   - Or scan the QR code on the NAS using a mobile device.

   The web page lists all the uninitialized QNAP NAS devices on the local network.

4. Find your NAS from the list and then click **Initialize**.

   Tip
   If your NAS is connected to the Internet, you can also go to https://install.qnap.com/set to enter the Cloud Key printed on the NAS. This allows you to initialize the NAS even if your NAS and your computer are not on the same network.

   The installation wizard opens in the default web browser.

5. Create an account or sign in to myQNAPcloud.

   Note
   You must return to this page to complete the installation after creating an account.

6. Specify the myQNAPcloud device name for the NAS.

   Note
   - The myQNAPcloud device name is used when remotely accessing the NAS.
   - For security purposes, the myQNAPcloud Link remote connection service will be disabled on your NAS after initialization. You can enable it by connecting to QuTS hero through LAN and then installing myQNAPcloud Link.

7. Click **Next**.
   The **Smart Installation Guide** opens in the default web browser.

8. Perform any of the following actions.
   - To check for the latest available version, click **Start**.
     The wizard downloads the latest available version, and then the NAS restarts after the download is complete. If a newer version is not available, the wizard automatically displays the **Smart Installation Guide**.
   - To install the out-of-the-box version, click **Skip**.
   - If the screen shows a different operating system, click **QuTS hero**.
     The NAS restarts and the smart installation screen shows QuTS hero as the operating system to install.

9. Click **Start Smart Installation Guide**.
   The **Install Firmware** window appears.

10. Install firmware using any of the following methods:

Installation methods	Steps
Automatic	Click **Start**. Automatically searches for available firmware updates and installs firmware.
Manual installation	**a.** Click **Manual Installation**. The **Install Firmware** window appears. **b.** Click **Browse**. The upload file window appears. **c.** Select file. **d.** Click **Open**. Starts firmware installation.
Skip	Click **Skip**. Skips firmware installation.

11. Specify the following information

    - **NAS name**: Specify a name with 1 to 14 characters. The name supports letters (A to Z, a to z), numbers (0 to 9), and hyphens (-), but cannot end with a hyphen.
    - **Username**: Specify an administrator username that contains 1 to 32 characters. The name can contain letters (A to Z, a to z), numbers (0 to 9), and hyphens (-), multi-byte Chinese, Japanese, Korean, and Russian characters.
      The username cannot contain the following special characters: grave accent (`), asterisk (*), equal sign (=), plus sign (+), square brackets ([ ]), curly brackets ({}), slash (\), vertical bar (|), semicolon (;), colon (:), apostrophe ('), quotation mark ("), comma (,), less than sign (<), greater than sign (>), backslash (/), question mark (?), percent sign (%), dollar sign ($), and the space character.

      Important
      To protect your NAS from brute force attacks, create a new system administrator account during QuTS hero initialization to disable the default "admin" account.

    - **Password**: Specify an administrator password with 1 to 64 characters. The password supports all ASCII characters.

12. Click **Next**.

13. Specify the time zone, date, and time.

> **Tip**
> QNAP recommends connecting to an NTP server to ensure that the NAS follows the Coordinated Universal Time (UTC) standard.

14. Click **Next**.
    The **Configure the network settings** screen appears.
15. Select **Obtain an IP address automatically (DHCP)**.
16. Click **Next**.
17. Review the settings.
18. Click **Apply**.
    A confirmation message appears.

> **Warning**
> Clicking **Initialize** deletes all data on the drive before installing QuTS hero.

19. Click **Initialize**.
    QuTS hero initialization starts. It may take a few minutes to complete the process.
    After the initialization, you can click **Go to NAS Management** to start using QuTS hero and configuring other settings.

5. Basic Operations

This chapter describes basic NAS operations.

Power button

Operation	User Action	Result
Power on	Press the button once.	The device powers on.
Power off	Press and hold the button for 1.5 seconds.	The device powers off.
Force power off	Press and hold the button for 5 seconds.	The device powers off. **Important** Use this method only when the device is unresponsive.

Reset button

Important

To protect your device from brute force attacks, QNAP recommends disabling the default `admin` account after a system reset. To disable the default `admin` account, you must first create a new administrator account, log out of the `admin` account, and then log in with the new account.

Operation	User Action	Result

Basic system reset	Press and hold the button for 3 seconds.	The following settings are reset to default:
		• The `admin` account is automatically enabled.
		• System administrator password: For details on the default password, see this FAQ.
		• TCP/IP configuration:
		  • Obtain IP address settings automatically via DHCP
		  • Disable jumbo frames
		  • If port trunking is enabled (multi-LAN models only), the port trunking mode is reset to "Active Backup (Failover)".
		• System port: 8080 (system service port)
		• Security level: Low (Allow all connections)
		• LCD panel password: (blank)
		• VLAN: Disabled

Advanced system reset	Press and hold the button for 15 seconds.	The default factory settings are restored. To retrieve old data after an advanced system reset, recreate the previous folder structure on the NAS.

USB One Touch Copy button

The USB One Touch Copy button allows you to copy data backups from a USB device to the QNAP device or from the QNAP device to a USB device.

This feature supports incremental backups. The QNAP device only copies files that were modified or added after the last backup.

To configure the behavior of the button when an external device is connected to the button's USB port, install and use Hybrid Backup Sync on your QNAP operating system. For details, see the Hybrid Backup Sync documentation.

LEDs

LEDs indicate the system status and related information when the device is powered on. The following LED information applies only when the drive is correctly installed and when the device is connected to the network or to a host.

System Status LED

Status	Description
Flashes green and red alternately every 0.5 seconds	• A drive is being formatted. • The device is being initialized. • The operating system is being updated. • RAID rebuilding is in progress. • Online RAID Capacity Expansion is in progress. • Online RAID Level Migration is in progress.
Red	• A drive is invalid. • A volume has reached its full capacity. • A volume is about to reach its full capacity. • A system fan is not functioning. • An error occurred when accessing (read/write) the data. • A bad sector is detected on a drive. • The device is in degraded read-only mode (two member drives failed in RAID 5 or RAID 6 but the data can still be read). • A hardware self-test error occurred.
Flashes red every 0.5 seconds	The device is in degraded mode (one member drive failed in RAID 1, RAID 5, or RAID 6).
Green	The device is ready.
Flashes green every 0.5 seconds	• The device is not configured. • A drive is not formatted.
Off	• All drives are in standby mode. • The device is powered off.

Drive LED

Status	Description
Flashes red	Data is being accessed, and during the process a drive read/write error occurred.

Status	Description
Red	A drive read/write error occurred.
Flashes green	Data is being accessed.
Green	The drive is ready.
Off	No drive was detected.

LAN LED

Status	Description
Orange	The network connection is operating at 1 Gbps.
Flashes orange	The device is being accessed from the network.
Off	The device is not connected to a network.

2.5 Gigabit Ethernet Speed LED

Status	Description
Green	The network connection is operating at 2.5 Gbps.
Orange	The network connection is operating at 1 Gbps or 100 Mbps.
Off	• The network connection is operating at 10 Mbps. • There is no network connection.

2.5 Gigabit Ethernet Activity LED

Status	Description
Orange	A network connection has been established.
Flashes orange	The device is being accessed from the network.
Off	There is no network connection.

USB One Touch Copy LED

Status	Description
Flashes blue every 0.5 seconds	• A USB device connected to the USB One Touch Copy port is detected. • A USB device connected to the USB One Touch Copy port is being removed from the device. • A USB device connected to the USB One Touch Copy port is being accessed.
Blue	A USB device is detected in the USB One Touch Copy port.
Off	The host device has finished copying data to or from the USB device connected to the USB One Touch Copy port.

Audio alerts

Duration	Frequency	Description
Short beep (0.5 seconds)	1	• The NAS is starting up. • When the reset button is pressed for 3 seconds, the NAS resets configurations. • When the reset button is pressed for 15 seconds, the NAS resets configurations and reboots. • The operating system was updated.
	3	• The NAS data cannot be copied to the external storage device connected to the USB One Touch Copy port.
Long beep (1.5 seconds)	3 (every 5 minutes)	• A system fan is not functioning. • A fan module has been removed.
	2	• A disk volume is about to reach its full capacity. • A disk volume has reached its full capacity. • The drives are in degraded mode. • A drive is rebuilding. • A drive is plugged in or out.

Duration	Frequency	Description
Long beep (1.5 seconds)	1	• The NAS was powered off by force shutdown (hardware shutdown). • The NAS was powered on successfully and is ready.

6. NAS Migration

You can migrate data and settings from your current NAS to another NAS model with minimal disruptions by installing all the hard drives from the source NAS to the destination NAS. RAID configuration and other settings are retained on the destination NAS after migration.

NAS migration requirements

You can only migrate drives and system settings to specific NAS models, depending on your source NAS. For the list of NAS models compatible with direct NAS migration, see https://www.qnap.com/en/nas-migration.

Your device must meet the following requirements:

- The destination NAS must run on the same QuTS hero version as the source NAS (or later).

  Important
  Due to incompatibilities in file system, system migration between QTS NAS and QuTS hero NAS is not supported.

  Warning
  Migrating drives between QTS NAS and QuTS hero NAS can cause data corruption.

- The destination NAS must have sufficient free drive bays to accommodate all the drives that you are migrating from the source NAS.

For NAS models that do not support NAS migration, see How to Migrate Data and Folder Permissions between QTS and QuTS hero with HBS3.

Status and setting changes after NAS migration

The status of NAS data and settings varies after migration.

Data and Settings	After NAS Migration
Registered myQNAPcloud name	Your registered myQNAPcloud name is not migrated.

Data and Settings	After NAS Migration
Encrypted shared folders	If the NAS does not support file system encryption, encrypted shared folders are not migrated. **Warning** To prevent data loss, back up and save the encryption keys of encrypted shared folders in a safe place. You can also choose to decrypt shared folders before migration.
Shared folders	All shared folders and the downloaded files stored in them are retained. **Warning** To prevent data loss, back up and save encryption keys or passwords of encrypted shared folders in a safe place before migration. **Important** Folder permissions on the destination NAS must be reconfigured after migration.
Network	If the number of network ports or network port specifications on the destination NAS is different from the source NAS, the following network and virtual settings may change and require reconfiguration: port trunking, virtual machines, Thunderbolt, and more.
Windows AD configuration	Windows AD configurations must be reconfigured.
Licenses	Licenses are not migrated. **Warning** To prevent losing all your software licenses, QNAP recommends deactivating licenses on the source NAS before data migration.
Applications	If the destination NAS has less RAM than the source NAS, the following features and applications might not function: Virtualization Station, Qsirch, and Snapshots.
Services	Only services supported by the destination NAS are available.
Multimedia features	Some multimedia features are disabled by default.

Migrating a NAS

Important

Before performing NAS migration, ensure that you understand all requirements and possible changes after migration.
For details see the following topics:

- NAS migration requirements
- Status and setting changes after NAS migration

1. Power off the source NAS and the destination NAS.
2. Remove the drives.

   Important

   QNAP recommends following the source NAS drive order when installing the drives. Take note of the drive tray order when removing the drives.

   a. Remove the drives from the source NAS.
   b. Remove the drive trays from the destination NAS.
3. Install the drives.
   a. Install source NAS drives onto the destination NAS drive trays.
   b. Insert the drive trays into the destination NAS.
4. Power on the destination NAS.
5. Log on to QuTS hero as an administrator on the destination NAS.
   The destination NAS automatically checks for the latest firmware update.

7. Troubleshooting

This chapter describes basic troubleshooting information.

Forcing Qfinder Pro or myQNAPcloud to locate the NAS

If Qfinder Pro or myQNAPcloud is unable to locate the NAS during QuTS hero installation, the drives or data may be faulty.

1. Power off the NAS.
2. Remove all drives.
3. Power on the NAS.
4. Locate the NAS using Qfinder Pro or myQNAPcloud.
5. Reinsert the drives.
6. Continue with the QuTS hero installation.

Hot-swapping failed drives

The NAS supports hot-swapping of drives in the following situations:

RAID Type	Number of Disks	Situation
RAID 1	2	One member drive fails.
RAID 5	≥ 3	One member drive fails.
RAID 6	≥ 4	One or two member drives fail.
RAID 10	≥ 4 (Must be an even number)	One or two member drives in two different pairs fail.
RAID 50	≥ 6	One disk per subgroup fails.

1. Log on to QTS.
2. Go to **Main Menu** > **Storage & Snapshots** > **Storage** > **Disks/VJBOD**.
3. Locate the failed drive.
4. Prepare a new drive with a capacity that is the same as or larger than the failed drive.
5. Remove the failed drive from the device.
6. Wait for 20 seconds or until the device beeps twice.
7. Remove the failed drive from the drive tray.

8. Insert the new drive into the drive tray.
9. Install the new drive.
   The NAS beeps twice.
10. Go to **Main Menu** > **Storage & Snapshots** > **Storage** > **Storage/Snapshots**.
11. Locate the storage pool that contains the new drive and then verify that the status is `Rebuilding`.

Recovering unintentionally removed healthy drives

The NAS supports exclusive RAID recovery technology to recover failed RAID groups from unintentional disconnection or removal of drives. Users can recover an inactive RAID 1, RAID 5, RAID 6, RAID 10, or RAID 50 group from degraded mode.

RAID Type	RAID Recovery Support	Number of Disks	Disk Failure Tolerance
Single	No	1	N/A
JBOD	No	≥ 2	N/A
RAID 0	No	≥ 2	N/A
RAID 1	Yes	2	1
RAID 5	Yes	≥ 3	1
RAID 6	Yes	≥ 4	2
RAID 10	Yes	≥ 4 (Must be an even number)	One disk per subgroup fails.
RAID 50	Yes	≥ 6	One disk per subgroup fails.

Support and other resources

QNAP provides the following resources:

Resource	URL
Documentation	https://www.qnap.com/download
Compatibility List	https://www.qnap.com/compatibility
NAS Migration Compatibility	https://www.qnap.com/go/nas-migration

Resource	URL
Expansion Unit Compatibility	https://www.qnap.com/go/compatibility-expansion
Service Portal	https://service.qnap.com
Product Support Status	https://www.qnap.com/go/product/status
Downloads	https://www.qnap.com/download
QNAP Community	https://community.qnap.com
QNAP Accessories Store	https://accessory.qnap.com

8. Glossary

Cloud Key

Unique 8-digit code assigned to each NAS device

myQNAPcloud

Provides various remote access services such as DDNS and myQNAPcloud Link

myQNAPcloud Link

Enables you to access QNAP devices over the internet without configuring complex port forwarding settings

Qfinder Pro

QNAP utility that lets you locate and access QNAP devices in your local area network

QNAP Account

User account that enables you to use myQNAPcloud remote access and other QNAP services. Also the name of the web portal for such services.

QuTS hero

QNAP NAS operating system featuring ZFS file system

9. Notices

This chapter provides information about warranty, disclaimers, licensing, and federal regulations.

Limited warranty

QNAP offers limited warranty service on our products. Your QNAP-branded hardware product is warranted against defects in materials and workmanship for a period of one (1) year or more from the date printed on the invoice. ("Warranty Period"). Please review your statutory rights at www.qnap.com/warranty, which may be amended from time to time by QNAP in its discretion.

Disclaimer

Information in this document is provided in connection with products of QNAP Systems, Inc. (the "QNAP"). No license, express or implied, by estoppels or otherwise, to any intellectual property rights is granted by this document. Except as provided in QNAP's terms and conditions of sale for such products, QNAP assumes no liability whatsoever, and QNAP disclaims any express or implied warranty, relating to sale and/or use of QNAP products including liability or warranties relating to fitness for a particular purpose, merchantability, or infringement of any patent, copyright or other intellectual property right.

In no event shall QNAP’s liability exceed the price paid for the product from direct, indirect, special, incidental, or consequential damages resulting from the use of the product, its accompanying software, or its documentation. QNAP makes no warranty or representation, expressed, implied, or statutory, with respect to its products or the contents or use of this documentation and all accompanying software, and specifically disclaims its quality, performance, merchantability, or fitness for any particular purpose. QNAP reserves the right to revise or update its products, software, or documentation without obligation to notify any individual or entity.

Back up the system periodically to avoid any potential data loss is recommended. QNAP disclaims any responsibility of all sorts of data loss or recovery.

Should you return any components of the package of QNAP products such as NAS (Network Attached Storage) for refund or maintenance, make sure they are carefully packed for shipping. Any form of damages due to improper packaging will not be compensated.

All the features, functionality, and other product specifications are subject to change without prior notice or obligation. Information contained herein is subject to change without notice.

Further, the ® or ™ symbols are not used in the text.

Copyright and trademarks

Copyright © 2026 QNAP Systems, Inc. All rights reserved.

QNAP and other QNAP product names and logos are proprietary marks, trademarks, or registered trademarks of QNAP Systems, Inc.

The terms HDMI, HDMI High-Definition Multimedia Interface, HDMI Trade dress and the HDMI Logos are trademarks or registered trademarks of HDMI Licensing Administrator, Inc.

Other company names and products mentioned herein are trademarks or registered trademarks of their respective holders.

GNU General Public License

Version 3, 29 June 2007

Everyone is permitted to copy and distribute verbatim copies of this license document, but changing it is not allowed.

Preamble

The GNU General Public License is a free, copy left license for software and other kinds of works.

The licenses for most software and other practical works are designed to take away your freedom to share and change the works. By contrast, the GNU General Public License is intended to guarantee your freedom to share and change all versions of a program--to make sure it remains free software for all its users. We, the Free Software Foundation, use the GNU General Public License for most of our software; it applies also to any other work released this way by its authors. You can apply it to your programs, too.

When we speak of free software, we are referring to freedom, not price. Our General Public Licenses are designed to make sure that you have the freedom to distribute copies of free software (and charge for them if you wish), that you receive source code or can get it if you want it, that you can change the software or use pieces of it in new free programs, and that you know you can do these things.

To protect your rights, we need to prevent others from denying you these rights or asking you to surrender the rights. Therefore, you have certain responsibilities if you distribute copies of the software, or if you modify it: responsibilities to respect the freedom of others.

For example, if you distribute copies of such a program, whether gratis or for a fee, you must pass on to the recipients the same freedoms that you received. You must make sure that they, too, receive or can get the source code. And you must show them these terms so they know their rights.

Developers that use the GNU GPL protect your rights with two steps: (1) assert copyright on the software, and (2) offer you this License giving you legal permission to copy, distribute and/or modify it.

For the developers' and authors' protection, the GPL clearly explains that there is no warranty for this free software. For both users' and authors' sake, the GPL requires that modified versions be marked as changed, so that their problems will not be attributed erroneously to authors of previous versions.

Some devices are designed to deny users access to install or run modified versions of the software inside them, although the manufacturer can do so. This is fundamentally incompatible with the aim of protecting users' freedom to change the software. The systematic pattern of such abuse occurs in the area of products for individuals to use, which is precisely where it is most unacceptable. Therefore, we have designed this version of the GPL to prohibit the practice for those products. If such problems arise substantially in other domains, we stand ready to extend this provision to those domains in future versions of the GPL, as needed to protect the freedom of users.

Finally, every program is threatened constantly by software patents. States should not allow patents to restrict development and use of software on general-purpose computers, but in those that do, we wish to avoid the special danger that patents applied to a free program could make it effectively proprietary. To prevent this, the GPL assures that patents cannot be used to render the program non-free.

The precise terms and conditions for copying, distribution and modification follow.

Terms and Conditions

1. Definitions.
   “This License” refers to version 3 of the GNU General Public License.
   “Copyright” also means copyright-like laws that apply to other kinds of works, such as semiconductor masks.
   “The Program” refers to any copyrightable work licensed under this License. Each licensee is addressed as “you”. “Licensees” and “recipients” may be individuals or organizations.
   To “modify” a work means to copy from or adapt all or part of the work in a fashion requiring copyright permission, other than the making of an exact copy. The resulting work is called a “modified version” of the earlier work or a work “based on” the earlier work.
   A “covered work” means either the unmodified Program or a work based on the Program.
   To “propagate” a work means to do anything with it that, without permission, would make you directly or secondarily liable for infringement under applicable copyright law, except executing it on a computer or modifying a private copy. Propagation includes copying, distribution (with or without modification), making available to the public, and in some countries other activities as well.
   To “convey” a work means any kind of propagation that enables other parties to make or receive copies. Mere interaction with a user through a computer network, with no transfer of a copy, is not conveying.
   An interactive user interface displays “Appropriate Legal Notices” to the extent that it includes a convenient and prominently visible feature that (1) displays an appropriate copyright notice, and (2) tells the user that there is no warranty for the work (except to the extent that warranties are provided), that licensees may convey the work under this License, and how to view a copy of this License. If the interface presents a list of user commands or options, such as a menu, a prominent item in the list meets this criterion.

2. Source Code.
   The “source code” for a work means the preferred form of the work for making modifications to it. “Object code” means any non-source form of a work.
   A “Standard Interface” means an interface that either is an official standard defined by a recognized standards body, or, in the case of interfaces specified for a particular programming language, one that is widely used among developers working in that language.
   The “System Libraries” of an executable work include anything, other than the work as a whole, that (a) is included in the normal form of packaging a Major Component, but which is not

part of that Major Component, and (b) serves only to enable use of the work with that Major Component, or to implement a Standard Interface for which an implementation is available to the public in source code form. A “Major Component”, in this context, means a major essential component (kernel, window system, and so on) of the specific operating system (if any) on which the executable work runs, or a compiler used to produce the work, or an object code interpreter used to run it.
The “Corresponding Source” for a work in object code form means all the source code needed to generate, install, and (for an executable work) run the object code and to modify the work, including scripts to control those activities. However, it does not include the work's System Libraries, or general-purpose tools or generally available free programs which are used unmodified in performing those activities but which are not part of the work. For example, Corresponding Source includes interface definition files associated with source files for the work, and the source code for shared libraries and dynamically linked subprograms that the work is specifically designed to require, such as by intimate data communication or control flow between those subprograms and other parts of the work.
The Corresponding Source need not include anything that users can regenerate automatically from other parts of the Corresponding Source.
The Corresponding Source for a work in source code form is that same work.

3. Basic Permissions.
All rights granted under this License are granted for the term of copyright on the Program, and are irrevocable provided the stated conditions are met. This License explicitly affirms your unlimited permission to run the unmodified Program. The output from running a covered work is covered by this License only if the output, given its content, constitutes a covered work. This License acknowledges your rights of fair use or other equivalent, as provided by copyright law.
You may make, run and propagate covered works that you do not convey, without conditions so long as your license otherwise remains in force. You may convey covered works to others for the sole purpose of having them make modifications exclusively for you, or provide you with facilities for running those works, provided that you comply with the terms of this License in conveying all material for which you do not control copyright. Those thus making or running the covered works for you must do so exclusively on your behalf, under your direction and control, on terms that prohibit them from making any copies of your copyrighted material outside their relationship with you.
Conveying under any other circumstances is permitted solely under the conditions stated below. Sublicensing is not allowed; section 10 makes it unnecessary.

4. Protecting Users' Legal Rights From Anti-Circumvention Law.
No covered work shall be deemed part of an effective technological measure under any applicable law fulfilling obligations under article 11 of the WIPO copyright treaty adopted on 20 December 1996, or similar laws prohibiting or restricting circumvention of such measures.
When you convey a covered work, you waive any legal power to forbid circumvention of technological measures to the extent such circumvention is effected by exercising rights under this License with respect to the covered work, and you disclaim any intention to limit operation or modification of the work as a means of enforcing, against the work's users, your or third parties' legal rights to forbid circumvention of technological measures.

5. Conveying Verbatim Copies.
You may convey verbatim copies of the Program's source code as you receive it, in any medium, provided that you conspicuously and appropriately publish on each copy an appropriate copyright notice; keep intact all notices stating that this License and any non-permissive terms

added in accord with section 7 apply to the code; keep intact all notices of the absence of any warranty; and give all recipients a copy of this License along with the Program.
You may charge any price or no price for each copy that you convey, and you may offer support or warranty protection for a fee.

6. Conveying Modified Source Versions.
   You may convey a work based on the Program, or the modifications to produce it from the Program, in the form of source code under the terms of section 4, provided that you also meet all of these conditions:

   a. The work must carry prominent notices stating that you modified it, and giving a relevant date.

   b. The work must carry prominent notices stating that it is released under this License and any conditions added under section 7. This requirement modifies the requirement in section 4 to “keep intact all notices”.

   c. You must license the entire work, as a whole, under this License to anyone who comes into possession of a copy. This License will therefore apply, along with any applicable section 7 additional terms, to the whole of the work, and all its parts, regardless of how they are packaged. This License gives no permission to license the work in any other way, but it does not invalidate such permission if you have separately received it.

   d. If the work has interactive user interfaces, each must display Appropriate Legal Notices; however, if the Program has interactive interfaces that do not display Appropriate Legal Notices, your work need not make them do so.
      A compilation of a covered work with other separate and independent works, which are not by their nature extensions of the covered work, and which are not combined with it such as to form a larger program, in or on a volume of a storage or distribution medium, is called an “aggregate” if the compilation and its resulting copyright are not used to limit the access or legal rights of the compilation's users beyond what the individual works permit. Inclusion of a covered work in an aggregate does not cause this License to apply to the other parts of the aggregate.

7. Conveying Non-Source Forms.
   You may convey a covered work in object code form under the terms of sections 4 and 5, provided that you also convey the machine-readable Corresponding Source under the terms of this License, in one of these ways:

   a. Convey the object code in, or embodied in, a physical product (including a physical distribution medium), accompanied by the Corresponding Source fixed on a durable physical medium customarily used for software interchange.

   b. Convey the object code in, or embodied in, a physical product (including a physical distribution medium), accompanied by a written offer, valid for at least three years and valid for as long as you offer spare parts or customer support for that product model, to give anyone who possesses the object code either (1) a copy of the Corresponding Source for all the software in the product that is covered by this License, on a durable physical medium customarily used for software interchange, for a price no more than your reasonable cost of physically performing this conveying of source, or (2) access to copy the Corresponding Source from a network server at no charge.

c. Convey individual copies of the object code with a copy of the written offer to provide the Corresponding Source. This alternative is allowed only occasionally and noncommercially, and only if you received the object code with such an offer, in accord with subsection 6b.

d. Convey the object code by offering access from a designated place (gratis or for a charge), and offer equivalent access to the Corresponding Source in the same way through the same place at no further charge. You need not require recipients to copy the Corresponding Source along with the object code. If the place to copy the object code is a network server, the Corresponding Source may be on a different server (operated by you or a third party) that supports equivalent copying facilities, provided you maintain clear directions next to the object code saying where to find the Corresponding Source. Regardless of what server hosts the Corresponding Source, you remain obligated to ensure that it is available for as long as needed to satisfy these requirements.

e. Convey the object code using peer-to-peer transmission, provided you inform other peers where the object code and Corresponding Source of the work are being offered to the general public at no charge under subsection 6d.
A separable portion of the object code, whose source code is excluded from the Corresponding Source as a System Library, need not be included in conveying the object code work.
A "User Product" is either (1) a "consumer product", which means any tangible personal property which is normally used for personal, family, or household purposes, or (2) anything designed or sold for incorporation into a dwelling. In determining whether a product is a consumer product, doubtful cases shall be resolved in favor of coverage. For a particular product received by a particular user, "normally used" refers to a typical or common use of that class of product, regardless of the status of the particular user or of the way in which the particular user actually uses, or expects or is expected to use, the product. A product is a consumer product regardless of whether the product has substantial commercial, industrial or non-consumer uses, unless such uses represent the only significant mode of use of the product.
"Installation Information" for a User Product means any methods, procedures, authorization keys, or other information required to install and execute modified versions of a covered work in that User Product from a modified version of its Corresponding Source. The information must suffice to ensure that the continued functioning of the modified object code is in no case prevented or interfered with solely because modification has been made.
If you convey an object code work under this section in, or with, or specifically for use in, a User Product, and the conveying occurs as part of a transaction in which the right of possession and use of the User Product is transferred to the recipient in perpetuity or for a fixed term (regardless of how the transaction is characterized), the Corresponding Source conveyed under this section must be accompanied by the Installation Information. But this requirement does not apply if neither you nor any third party retains the ability to install modified object code on the User Product (for example, the work has been installed in ROM).
The requirement to provide Installation Information does not include a requirement to continue to provide support service, warranty, or updates for a work that has been modified or installed by the recipient, or for the User Product in which it has been modified or installed. Access to a network may be denied when the modification itself materially and adversely affects the operation of the network or violates the rules and protocols for communication across the network.

Corresponding Source conveyed, and Installation Information provided, in accord with this section must be in a format that is publicly documented (and with an implementation available to the public in source code form), and must require no special password or key for unpacking, reading or copying.

8. Additional Terms.
"Additional permissions" are terms that supplement the terms of this License by making exceptions from one or more of its conditions. Additional permissions that are applicable to the entire Program shall be treated as though they were included in this License, to the extent that they are valid under applicable law. If additional permissions apply only to part of the Program, that part may be used separately under those permissions, but the entire Program remains governed by this License without regard to the additional permissions.
When you convey a copy of a covered work, you may at your option remove any additional permissions from that copy, or from any part of it. (Additional permissions may be written to require their own removal in certain cases when you modify the work.) You may place additional permissions on material, added by you to a covered work, for which you have or can give appropriate copyright permission.
Notwithstanding any other provision of this License, for material you add to a covered work, you may (if authorized by the copyright holders of that material) supplement the terms of this License with terms:

a. Disclaiming warranty or limiting liability differently from the terms of sections 15 and 16 of this License; or

b. Requiring preservation of specified reasonable legal notices or author attributions in that material or in the Appropriate Legal Notices displayed by works containing it; or

c. Prohibiting misrepresentation of the origin of that material, or requiring that modified versions of such material be marked in reasonable ways as different from the original version; or

d. Limiting the use for publicity purposes of names of licensors or authors of the material; or

e. Declining to grant rights under trademark law for use of some trade names, trademarks, or service marks; or

f. Requiring indemnification of licensors and authors of that material by anyone who conveys the material (or modified versions of it) with contractual assumptions of liability to the recipient, for any liability that these contractual assumptions directly impose on those licensors and authors.
All other non-permissive additional terms are considered "further restrictions" within the meaning of section 10. If the Program as you received it, or any part of it, contains a notice stating that it is governed by this License along with a term that is a further restriction, you may remove that term. If a license document contains a further restriction but permits relicensing or conveying under this License, you may add to a covered work material governed by the terms of that license document, provided that the further restriction does not survive such relicensing or conveying.
If you add terms to a covered work in accord with this section, you must place, in the relevant source files, a statement of the additional terms that apply to those files, or a notice indicating where to find the applicable terms.
Additional terms, permissive or non-permissive, may be stated in the form of a separately written license, or stated as exceptions; the above requirements apply either way.

9. Termination.
   You may not propagate or modify a covered work except as expressly provided under this License. Any attempt otherwise to propagate or modify it is void, and will automatically terminate your rights under this License (including any patent licenses granted under the third paragraph of section 11).
   However, if you cease all violation of this License, then your license from a particular copyright holder is reinstated (a) provisionally, unless and until the copyright holder explicitly and finally terminates your license, and (b) permanently, if the copyright holder fails to notify you of the violation by some reasonable means prior to 60 days after the cessation.
   Moreover, your license from a particular copyright holder is reinstated permanently if the copyright holder notifies you of the violation by some reasonable means, this is the first time you have received notice of violation of this License (for any work) from that copyright holder, and you cure the violation prior to 30 days after your receipt of the notice.
   Termination of your rights under this section does not terminate the licenses of parties who have received copies or rights from you under this License. If your rights have been terminated and not permanently reinstated, you do not qualify to receive new licenses for the same material under section 10.

10. Acceptance Not Required for Having Copies.
    You are not required to accept this License in order to receive or run a copy of the Program. Ancillary propagation of a covered work occurring solely as a consequence of using peer-to-peer transmission to receive a copy likewise does not require acceptance. However, nothing other than this License grants you permission to propagate or modify any covered work. These actions infringe copyright if you do not accept this License. Therefore, by modifying or propagating a covered work, you indicate your acceptance of this License to do so.

11. Automatic Licensing of Downstream Recipients.
    Each time you convey a covered work, the recipient automatically receives a license from the original licensors, to run, modify and propagate that work, subject to this License. You are not responsible for enforcing compliance by third parties with this License.
    An “entity transaction” is a transaction transferring control of an organization, or substantially all assets of one, or subdividing an organization, or merging organizations. If propagation of a covered work results from an entity transaction, each party to that transaction who receives a copy of the work also receives whatever licenses to the work the party's predecessor in interest had or could give under the previous paragraph, plus a right to possession of the Corresponding Source of the work from the predecessor in interest, if the predecessor has it or can get it with reasonable efforts.
    You may not impose any further restrictions on the exercise of the rights granted or affirmed under this License. For example, you may not impose a license fee, royalty, or other charge for exercise of rights granted under this License, and you may not initiate litigation (including a cross-claim or counterclaim in a lawsuit) alleging that any patent claim is infringed by making, using, selling, offering for sale, or importing the Program or any portion of it.

12. Patents.
    A “contributor” is a copyright holder who authorizes use under this License of the Program or a work on which the Program is based. The work thus licensed is called the contributor's “contributor version”.
    A contributor's “essential patent claims” are all patent claims owned or controlled by the contributor, whether already acquired or hereafter acquired, that would be infringed by some manner, permitted by this License, of making, using, or selling its contributor version, but do not include claims that would be infringed only as a consequence of further modification of the

contributor version. For purposes of this definition, “control” includes the right to grant patent sublicenses in a manner consistent with the requirements of this License.
Each contributor grants you a non-exclusive, worldwide, royalty-free patent license under the contributor's essential patent claims, to make, use, sell, offer for sale, import and otherwise run, modify and propagate the contents of its contributor version.
In the following three paragraphs, a “patent license” is any express agreement or commitment, however denominated, not to enforce a patent (such as an express permission to practice a patent or covenant not to sue for patent infringement). To “grant” such a patent license to a party means to make such an agreement or commitment not to enforce a patent against the party.
If you convey a covered work, knowingly relying on a patent license, and the Corresponding Source of the work is not available for anyone to copy, free of charge and under the terms of this License, through a publicly available network server or other readily accessible means, then you must either (1) cause the Corresponding Source to be so available, or (2) arrange to deprive yourself of the benefit of the patent license for this particular work, or (3) arrange, in a manner consistent with the requirements of this License, to extend the patent license to downstream recipients. “Knowingly relying” means you have actual knowledge that, but for the patent license, your conveying the covered work in a country, or your recipient's use of the covered work in a country, would infringe one or more identifiable patents in that country that you have reason to believe are valid.
If, pursuant to or in connection with a single transaction or arrangement, you convey, or propagate by procuring conveyance of, a covered work, and grant a patent license to some of the parties receiving the covered work authorizing them to use, propagate, modify or convey a specific copy of the covered work, then the patent license you grant is automatically extended to all recipients of the covered work and works based on it.
A patent license is “discriminatory” if it does not include within the scope of its coverage, prohibits the exercise of, or is conditioned on the non-exercise of one or more of the rights that are specifically granted under this License. You may not convey a covered work if you are a party to an arrangement with a third party that is in the business of distributing software, under which you make payment to the third party based on the extent of your activity of conveying the work, and under which the third party grants, to any of the parties who would receive the covered work from you, a discriminatory patent license (a) in connection with copies of the covered work conveyed by you (or copies made from those copies), or (b) primarily for and in connection with specific products or compilations that contain the covered work, unless you entered into that arrangement, or that patent license was granted, prior to 28 March 2007.
Nothing in this License shall be construed as excluding or limiting any implied license or other defenses to infringement that may otherwise be available to you under applicable patent law.

13. No Surrender of Others' Freedom.
If conditions are imposed on you (whether by court order, agreement or otherwise) that contradict the conditions of this License, they do not excuse you from the conditions of this License. If you cannot convey a covered work so as to satisfy simultaneously your obligations under this License and any other pertinent obligations, then as a consequence you may not convey it at all. For example, if you agree to terms that obligate you to collect a royalty for further conveying from those to whom you convey the Program, the only way you could satisfy both those terms and this License would be to refrain entirely from conveying the Program.

14. Use with the GNU Affero General Public License.
Notwithstanding any other provision of this License, you have permission to link or combine any covered work with a work licensed under version 3 of the GNU Affero General Public License

into a single combined work, and to convey the resulting work. The terms of this License will continue to apply to the part which is the covered work, but the special requirements of the GNU Affero General Public License, section 13, concerning interaction through a network will apply to the combination as such.

15. Revised Versions of this License.
The Free Software Foundation may publish revised and/or new versions of the GNU General Public License from time to time. Such new versions will be similar in spirit to the present version, but may differ in detail to address new problems or concerns.
Each version is given a distinguishing version number. If the Program specifies that a certain numbered version of the GNU General Public License “or any later version” applies to it, you have the option of following the terms and conditions either of that numbered version or of any later version published by the Free Software Foundation. If the Program does not specify a version number of the GNU General Public License, you may choose any version ever published by the Free Software Foundation.
If the Program specifies that a proxy can decide which future versions of the GNU General Public License can be used, that proxy's public statement of acceptance of a version permanently authorizes you to choose that version for the Program.
Later license versions may give you additional or different permissions. However, no additional obligations are imposed on any author or copyright holder as a result of your choosing to follow a later version.

16. Disclaimer of Warranty.
THERE IS NO WARRANTY FOR THE PROGRAM, TO THE EXTENT PERMITTED BY APPLICABLE LAW. EXCEPT WHEN OTHERWISE STATED IN WRITING THE COPYRIGHT HOLDERS AND/OR OTHER PARTIES PROVIDE THE PROGRAM “AS IS” WITHOUT WARRANTY OF ANY KIND, EITHER EXPRESSED OR IMPLIED, INCLUDING, BUT NOT LIMITED TO, THE IMPLIED WARRANTIES OF MERCHANTABILITY AND FITNESS FOR A PARTICULAR PURPOSE. THE ENTIRE RISK AS TO THE QUALITY AND PERFORMANCE OF THE PROGRAM IS WITH YOU. SHOULD THE PROGRAM PROVE DEFECTIVE, YOU ASSUME THE COST OF ALL NECESSARY SERVICING, REPAIR OR CORRECTION.

17. Limitation of Liability.
IN NO EVENT UNLESS REQUIRED BY APPLICABLE LAW OR AGREED TO IN WRITING WILL ANY COPYRIGHT HOLDER, OR ANY OTHER PARTY WHO MODIFIES AND/OR CONVEYS THE PROGRAM AS PERMITTED ABOVE, BE LIABLE TO YOU FOR DAMAGES, INCLUDING ANY GENERAL, SPECIAL, INCIDENTAL OR CONSEQUENTIAL DAMAGES ARISING OUT OF THE USE OR INABILITY TO USE THE PROGRAM (INCLUDING BUT NOT LIMITED TO LOSS OF DATA OR DATA BEING RENDERED INACCURATE OR LOSSES SUSTAINED BY YOU OR THIRD PARTIES OR A FAILURE OF THE PROGRAM TO OPERATE WITH ANY OTHER PROGRAMS), EVEN IF SUCH HOLDER OR OTHER PARTY HAS BEEN ADVISED OF THE POSSIBILITY OF SUCH DAMAGES.

18. Interpretation of Sections 16 and 17.
If the disclaimer of warranty and limitation of liability provided above cannot be given local legal effect according to their terms, reviewing courts shall apply local law that most closely approximates an absolute waiver of all civil liability in connection with the Program, unless a warranty or assumption of liability accompanies a copy of the Program in return for a fee.

END OF TERMS AND CONDITIONS

CE notice

This device complies with CE Compliance Class B.

UKCA notice

This device complies with the UKCA requirements for products sold in Great Britain.

FCC notice

FCC Class B Notice

This device complies with Part 15 of the FCC Rules. Operation is subject to the following two conditions:

1. This device may not cause harmful interference.
2. This device must accept any interference received, including interference that may cause undesired operation.

Note

This equipment has been tested and found to comply with the limits for a Class B digital device, pursuant to Part 15 of the FCC Rules. These limits are designed to provide reasonable protection against harmful interference in a residential installation. This equipment generates, uses, and can radiate radio frequency energy and, if not installed and used in accordance with the instructions, may cause harmful interference to radio communications. However, there is no guarantee that interference will not occur in a particular installation. If this equipment does cause harmful interference to radio or television reception, which can be determined by turning the equipment off and on, the user is encouraged to try to correct the interference by one or more of the following measures:

- Reorient or relocate the receiving antenna.
- Increase the separation between the equipment and receiver.
- Connect the equipment into an outlet on a circuit different from that to which the receiver is connected.
- Consult the dealer or an experienced radio/television technician for help.

Important

Any modifications made to this device that are not approved by QNAP Systems, Inc. may void the authority granted to the user by the FCC to operate this equipment.

VCCI notice

VCCI–B

BSMI notice

D33B77
RoHS

SJ/T 11364-2006

本产品符合中国 RoHS 标准。以下表格标示此产品中某有毒物质的含量符合中国 RoHS 标准规定的限量要求。

本产品上会附有"环境友好使用期限"的标签，此期限是估算这些物质"不会有泄漏或突变"的年限。本产品可能包含有较短的环境友好使用期限的可替换元件，像是电池或灯管，这些元件将会单独标示出来。

部件名称	有毒有害物质或元素					
	铅 (Pb)	汞 (Hg)	镉 (Cd)	六价铬 (CR(VI))	多溴联苯 (PBB)	多溴二苯醚 (PBDE)
壳体	0	0	0	0	0	0
显示	0	0	0	0	0	0
印刷电路板	0	0	0	0	0	0
金属螺帽	0	0	0	0	0	0
电缆组装	0	0	0	0	0	0
风扇组装	0	0	0	0	0	0
电力供应组装	0	0	0	0	0	0
电池	0	0	0	0	0	0
O: 表示该有毒有害物质在该部件所有物质材料中的含量均在 SJ/T11363-2006 标准规定的限量要求以下。						
X: 表示该有毒有害物质至少在该部件的某一均质材料中的含量超出 SJ/T11363-2006 标准规定的限量要求。						